Advance 7765 / Nilfisk CR1500

Service Manual

Advance 7765 Models:

- 56514925 (Variable Dump Gas)
- 56514926 (Variable Dump LP)
- 56514927 (Variable Dump Diesel)
- 56514928 (Manual Dump Gas)
- 56514929 (Manual Dump LP GM3.0L)
- 56514930 (Manual Dump Diesel S4Q2)
- 56514931 (Variable Dump LP)

Nilfisk CR1500 Models:

- 56514850 (Variable Dump Gas)
- 56514852 (Variable Dump LP)
- 56514854 (Variable Dump Diesel))

Nilfisk Advance

English

6/12 Revised 5/19 Form No. 56043160

Contents

General Information

General Machine Description

Machine Configurations

The Advance 7765 and Nilfisk CR1500 machines are industrial automatic rider sweeper/scrubbers with multiple sweep/scrub single-pass coverage. The 7765 and CR1500 are all-hydraulically operated and are equipped with power steering.

The machines are powered by a 3.0 liter, 86-hp GM gasoline or liquid propane gas (LPG) engine, or a 2.5 liter, 47.3-hp Mitsubishi diesel.

The 7765 machines are available in two different hopper configurations; a manual dump (MD) model and a variable dump (VD) model. The CR1500 machines are only available in the variable dump configuration.

- The manual dump models have a smaller, fixed hopper. A manual dump lever opens the hopper to empty the hopper onto the floor below the machine.
- The variable dump models use a hydraulic cylinder to raise the hopper for emptying into a dumpster or other receptacle. A separate hydraulic cylinder opens and closes the hopper dump door. Variable dump models are also equipped with a hopper filter, dust control motor and impeller, and filter shaker motor.

Hydraulic System

The engine drives two hydraulic pumps that power the machine systems. All of the motors on the machine are hydraulic except for the electric filter shaker motor.

- The 1.24 cubic inches per revolution (CIR) drive pump is a variable-displacement pump that powers the rear wheel drive motor for propulsion.
- The dual-displacement auxiliary gear pump includes two separate 1.02 CIR pumping elements in one unit that power the other machine work functions.

The scrub deck position, scrub brush motors, main broom motor, side broom motor, recovery vacuum motor, hopper vacuum fan motor and squeegee position are all controlled by hydraulic solenoid valves actuated by switches on the instrument panel.

The hopper lift and dump door hydraulic cylinders are controlled by mechanically-actuated hydraulic valves.

Drive and Steering Systems

The foot-activated directional control (drive) pedal controls the hydraulic oil flow from the variable-displacement pump to the hydraulic rear wheel drive motor to determine machine speed and direction. A hydroback (newer models) or mechanical centering device (older models) returns the pedal to the neutral position when the pedal is released.

The power steering unit controls the oil flow to the hydraulic steering cylinder. The steering cylinder moves a rack that turns a spur gear to steer the rear drive wheel.

Solution System

The Solution System uses gravity feed to deliver the solution to the scrub brushes. A ball valve, actuated by a mechanical solution control lever and linkage, controls the solution flow. The solution flow is continuously-variable from no flow to approximately 1¾ GPM [6.6 LPM] at the low setting, and to approximately 3½ GPM [13.2 LPM] at the high setting.

- The standard (non-recycling) Solution System delivers solution from the solution tank to the brushes. The squeegee system picks up the water from the floor and the squeegee vacuum fan directs it into the recovery tank. If detergent is to be used in the standard system, it must be mixed manually into the solution in the solution tank.
- The ESP/Recycle option uses a solution pump to transfer filtered recovered water from the recovery tank to the solution tank. A detergent pump adds detergent from a separate detergent tank into the solution supply line to the scrub brushes. The detergent flow rate is adjusted with the **DETERGENT FLOW** knob on the instrument panel.

Scrub System

The Scrub System uses three disc scrub brushes and has two selectable scrub pressures.

- The “normal” scrub setting provides approximately 252 lbs [114 kg] of scrub brush pressure.
- The “heavy” scrub setting provides approximately 600 lbs [272 kg.] of scrub brush pressure.

The scrub brushes are powered by individual hydraulic motors. A hydraulic cylinder extends and retracts the scrub deck and controls the scrub pressure.

Squeegee System

The Accu-Track™ squeegee system picks up the wastewater from the floor and directs it into the vacuum hose, which then carries the wastewater into the recovery tank. The squeegee assembly is designed to follow the scrub path accurately even in tight turns.

A hydraulic cylinder raises and lowers the squeegee.

A proximity switch adjacent to the accelerator/directional control pedal raises the squeegee if the squeegee is lowered and the pedal is moved to the reverse position.

Recovery System

The recovery vacuum motor creates a vacuum and sufficient airflow to convey used cleaning solution from the rear squeegee into the recovery tank.

On models equipped with the ESP/Recycle option, a solution transfer pump in the recovery tank pumps filtered water from the recovery tank to the solution tank to extend the scrub time. The solution transfer pump is controlled by a float switch in the recovery tank.

Main Sweep System

The Main Sweep System uses a 50” [106.6 mm] long by 14” [35.5 cm] diameter cylindrical main broom to sweep dust and debris into the hopper in front of the scrub brushes. The main broom is powered by a hydraulic motor and is raised and lowered manually via the main broom lift control lever and mechanical linkage. There are two main broom sweep positions.

- The normal “sweep” position produces a 2”-3” [5-8 cm] broom pattern.
- The “float” position is used for heavy sweeping or when sweeping extremely uneven surfaces, and produces a 4”-5” [10-13 cm] broom pattern.

Side Sweep System (optional)

The Side Sweep System uses a 24” diameter rotary broom to sweep dirt and debris into the path of the main broom. The Side Sweep System is standard on variable dump models and optional on manual dump models.

The side broom is powered by a hydraulic motor, and is raised and lowered manually via the side broom lift knob and cable.

Dust Control System (variable dump models only)

The Dust Control System uses an impeller fan, driven by a hydraulic motor, to pull air from the hopper and through a baffle system and filter to minimize the dust generated from sweeping. A pre-clean flap restricts the heavier dust particles to an area below the filter. The lighter dust particles are trapped in the filter. An electric shaker motor, controlled by a switch on the instrument panel, vibrates the filter assembly to shake the fine dust from the filter to restore airflow for effective dust control, and to prolong filter life.

Service Manual Purpose and Application

This Service Manual is a technical resource designed to aid service personnel in maintaining and repairing the Advance 7765 / Nilfisk CR1500 Sweeper/Scrubbers to ensure optimum performance and long service life. Please read it thoroughly before servicing your machine.

Revision History

Revision	Description of change
01/18	The following changes were made as a result of adding the R6 power relay. ECO 12724 implemented around April 2017 • Added Electrical Wiring Diagram Rev C • Updated circuit operation description for squeegee system • Added photo of R6 relay location
	Clarified forward speed specifications

Other Reference Manuals and Information Sources

Nilfisk-Advance Publications

Model Name	Model Number	Instructions for Use Form Number	Parts List Form Number
Advance 7765	• 56514925 (VD Gas) • 56514926 (VD LP) • 56514927 (VD Diesel) • 56514928 (MD Gas) • 56514929 (MD LP GM3.0L) • 56514930 (MD Diesel S4Q2) • 56514931 (VD LP)	56041801 - English and Spanish	56042525
Nilfisk CR1500	• 56514850 (VD Gas) • 56514852 (VD LP) • 56514854 (VD Diesel)	56041714: DA, NO, SV, FI 56041715: DE, FR, NL, RU 56041716: ES, PT, IT, GR 56041717: ET, LV, LT, SL 56041718: SK, CS, PL, HU 56041719: US, TR	56042488

These manuals can be found on the following Nilfisk-Advance's electronic supported databases:

- Nilfisk-Advance Dealer Customer Zone
- Advance website: www.advance-us.com
- Nilfisk website: www.nilfisk.com
- EzParts service/parts CD-ROM

Engine Manufacturers' Technical Manuals

	Manual Name	Publication Number
GM 3.0L Gasoline and LPG	PSI Operation and Maintenance Manual	36100007/ REV020703
	PSI Tier 3 Certified Mobile Diagnostic and Troubleshooting Manual	PSITIER3 - G

Diagnostic and Service Tools

In addition to a full set of metric and standard tools, the following items are required in order to successfully and quickly perform troubleshooting and repair of Nilfisk-Advance Industrial floor cleaning equipment.

- Digital voltmeter (DVM) with DC current clamp
- Hydrometer
- Battery load tester for checking 12V batteries
- Automotive fuel pressure test gauge (used on gasoline engines)
- Set of torque wrenches

These tools are also available from Nilfisk-Advance, Inc.:

- PSI engine service kit, p/n 56109084; includes an LPG Test Kit, p/n 56504450, and a Diagnostic Communication Cable and software, p/n 56305647

PSI engine service kit, p/n 56109084

PSI LPG test kit, p/n 56504450

Diagnostic Communication Cable and software, p/n 56305647

- PSI diagnostics cable, 4-pin – 8-pin (Generation 1 old style), p/n 56109083

PSI diagnostics cable, 4-pin – 8-pin (Generation 1 old style), p/n 56109083

- Hydraulic test gauge w/connector, 3000 psi range, p/n 56504516

Hydraulic test gauge w/connector 3000 psi range, p/n 56504516

- Vacuum water lift gauge, p/n 56205281.

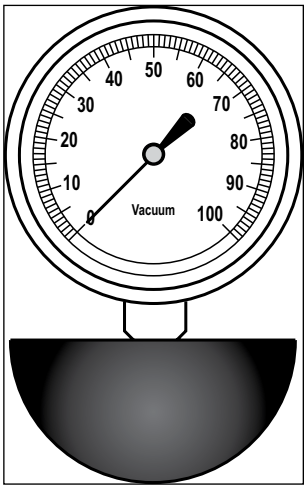

Conventions

All references to right, left, front and rear in this manual are as seen from the Operator's seat position.

Parts and Service

Repairs should be performed by an Authorized Nilfisk-Advance Service Center that employs factory-trained service personnel and maintains an inventory of Nilfisk-Advance original replacement parts and accessories.

Call the Nilfisk-Advance Dealer named below for repair parts or service. Please specify the Model Number (same as the Part Number) and Serial Number when discussing your machine.

(Dealer, affix service sticker here.)

Nameplate

The Model Number and Serial Number of the machine are shown on the **Nameplate** located on the front of the hydraulic reservoir enclosure, to the right and below the Operator seat.

This information is needed when ordering repair parts for the machine.

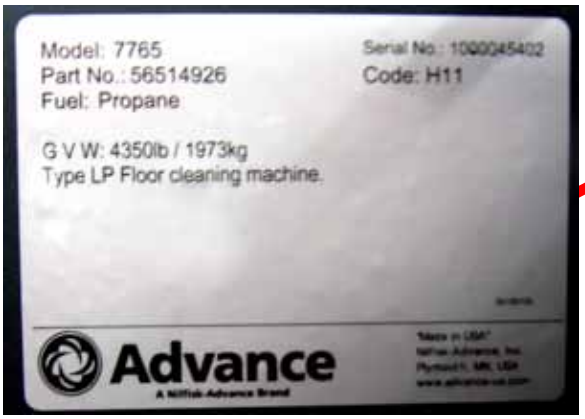

Cautions and Warning Symbols

Nilfisk-Advance uses the symbols below to signal potentially dangerous conditions. Read this information carefully and take the necessary steps to protect personnel and property.

Danger! Is used to warn of immediate hazards that will cause severe personal injury or death.

Warning! Is used to call attention to a situation that could cause severe personal injury.

Caution! Is used to call attention to a situation that could cause minor personal injury or damage to the machine or other property.

Read all instructions before using.

General Safety Instructions

Danger! This machine emits exhaust gases (carbon monoxide) that can cause serious injury or death. Always provide adequate ventilation when using the machine.

Warning! Be sure to follow these safety precautions to avoid situations that could cause severe personal injury.

- This machine should only be used by properly-trained and authorized personnel.
- While on ramps or inclines, avoid sudden stops when loaded. Avoid abrupt sharp turns. Use low speed down hills. Clean only while ascending (driving up) the ramp.
- Keep sparks, flame and smoking materials away from the battery. Explosive gases are vented during normal operation.
- Charging the battery produces highly-explosive hydrogen gas. Charge the battery only in well-ventilated areas away from open flame. Do not smoke while charging the battery.
- Remove all jewelry when working near electrical components.
- Turn the Key Switch off (O) and disconnect the battery before servicing electrical components.
- Never work underneath a machine without safety blocks or stands to support the machine.
- Do not dispense flammable cleaning agents, operate the machine on or near these agents, or operate in areas where flammable liquids exist.
- To avoid hydraulic oil injection or injury, always wear appropriate clothing and eye protection when working with or near any hydraulic system.

- Only use the brushes provided with the machine or those specified in the Instructions for Use. The use of other brushes may impair safety.

Caution! Be sure to follow these safety precautions to avoid situations that could cause personal injury, damage to property or equipment damage.

- This machine is not approved for use on public paths or roads.
- This machine is not suitable for picking up hazardous dust.
- Use care when using scarifier discs and grinding stones. Nilfisk-Advance will not be held responsible for any damage to floor surfaces caused by scarifiers or grinding stones.
- When operating this machine, ensure that individuals in close proximity are not endangered.
- Before performing any service function, carefully read all instructions pertaining to that function.
- Do not leave the machine unattended without first turning the Key Switch off (O), removing the key and securing the machine.
- Apply the parking brake before exiting the Operator's seat.
- Turn the Key Switch off (O) and remove the key before changing the brushes, and before opening any access panels.
- Take precautions to prevent hair, jewelry or loose clothing from becoming caught in moving parts.
- Use caution when steering and/or operating this machine in below-freezing temperature conditions. Any water in the solution or recovery tanks, or in the hose lines could freeze, causing damage to valves and fittings. Flush with windshield washer fluid.
- Do not use on surfaces having a gradient exceeding 14.1% (8°.) in transport or 10.5% (6°) while cleaning.
- All doors and covers are to be positioned as indicated in the instruction manual before using the machine.

Caution! Do not pressure-wash the operator instrument panel, electrical components or the engine compartment area.

Hopper Safety Lock Arm (variable dump only)

To prevent the hopper from dropping unexpectedly and causing injury, always engage the **Safety Lock Arm** before working under the hopper. The **Safety Lock Arm** is mounted to the right side of the frame and swings up to align with and support the bottom of the hopper as shown.

Warning! Never work under the hopper without first engaging the Safety Lock Arm.

After the work under the hopper is complete, swing the **Safety Lock Arm** back down to its disengaged position.

Jacking the Machine

Warning! ***Never work under a machine without safety stands or blocks to support the machine. When jacking the machine, do so at the designated Tie Down/Jacking Locations as shown below.***

Transporting the Machine

Caution! ***Before transporting the machine on an open truck or trailer, make sure the machine is tied down securely at the designated Tie Down/Jacking Locations shown below, all access doors and covers are secured (tape and strap as needed) and the parking brake is engaged.***

The jacking and tie down locations are identified with a decal on the body panel.

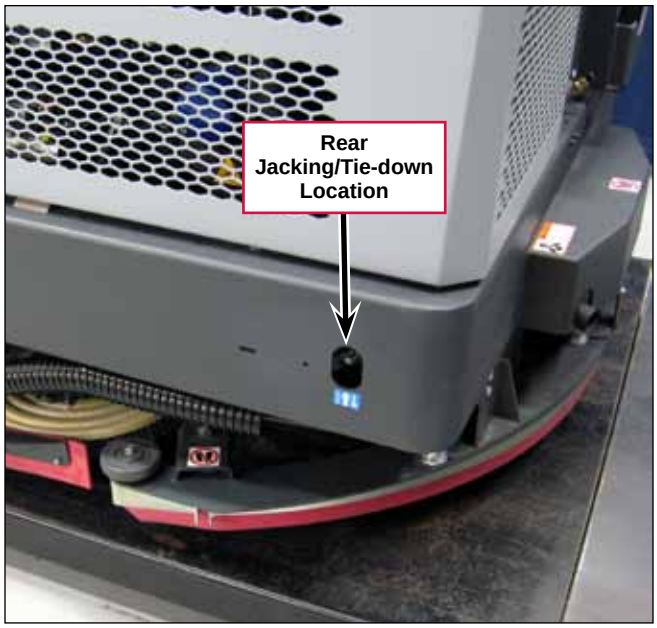

Towing or Pushing the Machine

Caution! ***The machine's hydrostatic wheel drive pump is equipped with a tow (bypass) valve that opens the hydraulic circuit to the wheel drive motor. This allows the wheel drive motor to "freewheel" when the machine is being towed/pushed short distances without the use of the engine. The tow valve is controlled by the Tow Valve Extension Shaft, located on top of the drive pump just in front of the engine.***

To open the hydraulic circuit to the wheel drive motor for towing, turn the Tow Valve Extension Shaft 90° to the bypass position (flats on the Shaft parallel to the front axle).

After towing, turn Tow Valve Extension Shaft 90° to the normal operating position (flats on the Shaft parallel to the pump centerline).

Note that if the tow valve is left in the open (free-wheeling) position, the wheel drive pump can't efficiently propel the machine in forward or reverse. Attempting to operate the machine with the tow valve in the bypass (towing) position can cause overheating of the hydraulic system and/or reduced operating performance.

Tow or push the machine no faster than a normal walking pace (2-3 miles per hour/ 3-5 kilometers per hour), and for no farther than 300 feet [100 meters]. Towing or pushing the machine farther than 300 feet [100 meters] can cause machine damage.

If the machine is to be moved farther than 300 feet [100 meters], raise the rear drive wheel off the floor and place on a suitable transport dolly.

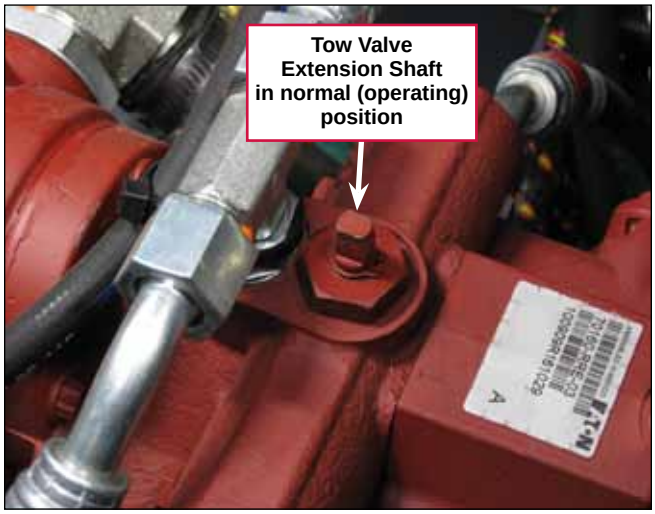

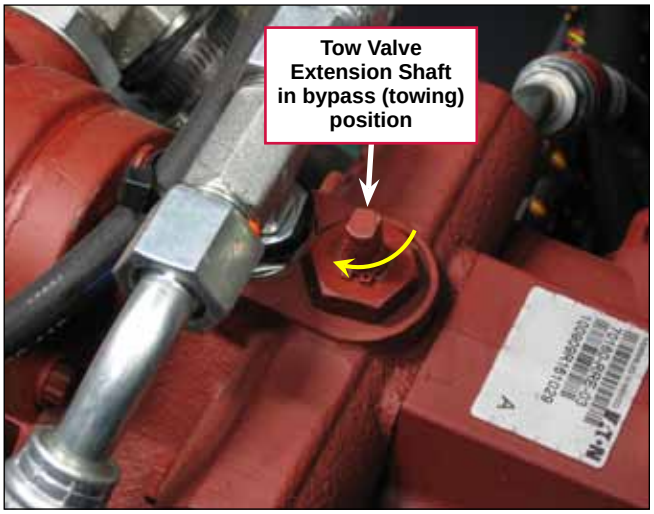

Technical Specifications

General Specifications

Engines	3.0 L, 86 hp GM MPFI gasoline (petrol)	
	3.0 L, 86 hp GM MPFI liquid propane (LPG)	
	2.5 L, 47.3 hp Mitsubishi diesel	
Length	107 in [272 cm]	
Width	59 in [150 cm]	
Height	61.5 in [156 cm]	
Height (with overhead guard)	85.5 in [217 cm]	
Total Weight	Variable Dump Models – 4,350 lbs [1,973 Kg]	
	Manual Dump Models – 3,900 lbs [1,769 Kg]	
Scrubbing Path	54 in [137 cm]	
Scrub Brush Pressure	Normal – 252 lbs [114 kg]	
	Heavy – 600 lbs [272 kg]	
Scrub Brush Diameter (3)	18 in [45 cm]	
Solution and Recover Tank Capacity	100 gal. [378.5 L] each	
Solution Flow Rates	Continuously variable	Off (solution level pulled back to off position)
		Approximately 1¾ GPM [6.6 LPM] at low setting
		Approximately 3½ GPM [13.2 LPM] at high setting
Sweeping Path	Variable Dump Models – 60 in [152 cm]	
	Manual Dump Models – 50 in [127 cm]	
Main Broom	50 in [127 cm] long, 14 in [35.5 cm] dia.	
Side Broom (optional on Manual Dump Models)	24 in [61 cm]	
Dust Filter	Variable Dump Models – 107 ft^2 [10 m^2]	
	Manual Dump Models – N/A	
Hopper Capacity	Variable Dump Models – 16 ft^3 [453 L]	
	Manual Dump Models – 6 ft^3 [170 L]	
Vacuum Fan	Hydraulically driven, high volume	
Vacuum Lift (minimum)	30” [76 cm]	
U-turn Aisle Width	120 in [305 cm]	
Turning Radius (left or right)	82 in [208 cm]	
Transport Ground Clearance	2.6 in [6.6 cm]	
Sound Pressure Level (ISO 11201)	87 dB (A)	
Sound Power Level (ISO 3744)	L_{WA} 109.0	
Vibrations at the Hand Controls (ISO 5349-1)	0.70 m/s^2	
Vibrations at the Seat (EN 1032)	0.20 m/s^2	

Overall Dimensions

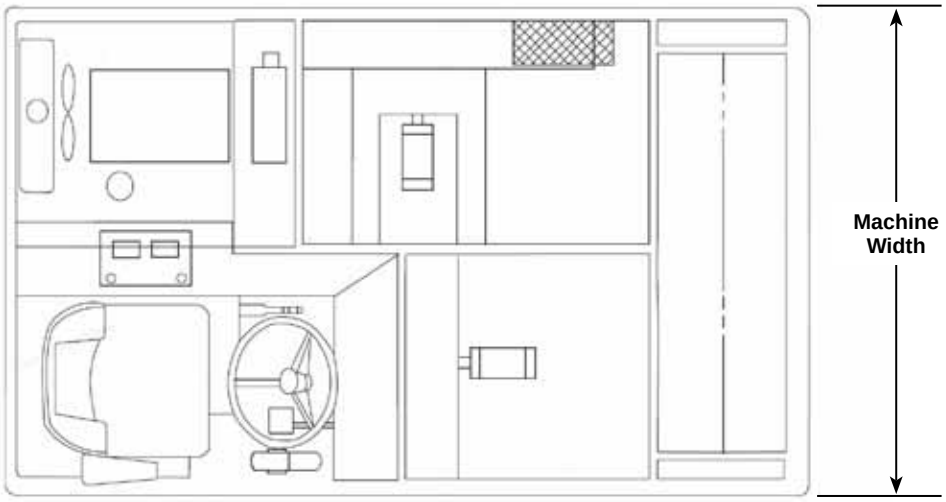

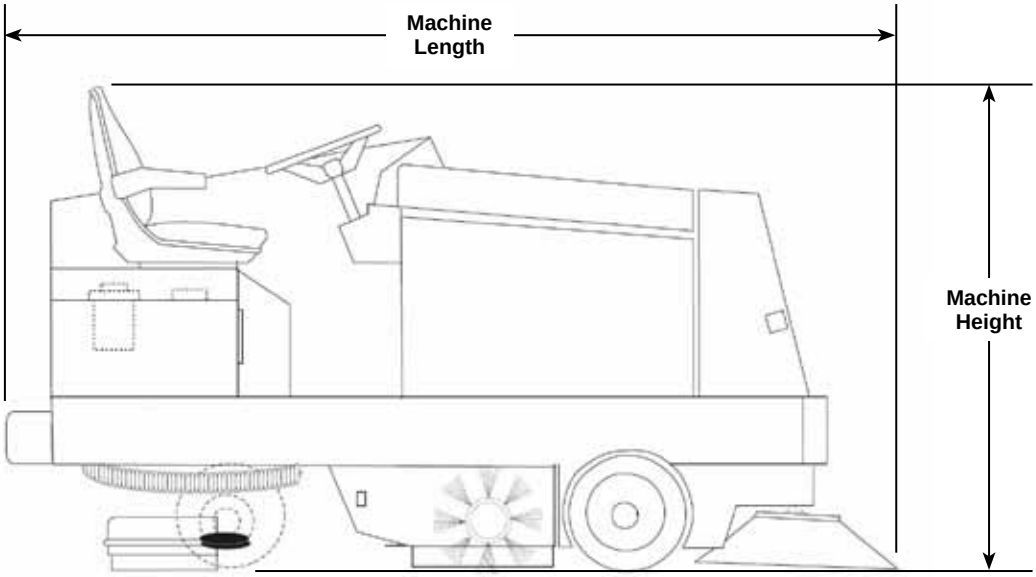

Engine and Machine Performance

Engine speeds	3.0 L GM (gasoline and LP)	Low - 850 RPM
		High - 2000 RPM
	Mitsubishi Diesel	Low - 950 RPM
		High - 2050 RPM
Transport speed forward	Advance 7765	7 mph (11 km/h) 150 RPM Wheel Speed
	Nilfisk CR1500 Advance 7765 with high torque wheel motor option	5.5 mph (9 km/h) 515 RPM wheel speed
Transport speed reverse	75 RPM	
Gradeability	Transport – 14.1% (8°)	
	Cleaning – 10.5% (6°)	

Fastener Torque Specifications

	Size	Plated Steel	Stainless Steel
Standard Torque Specifications (unless otherwise specified)	#10	42 in.-lb.	28 in.-lb.
	1/4“	100 in.-lb.	67 in.-lb.
	5/16”	17 ft.-lb.	11 ft.-lb.
	3/8”	31 ft.-lb.	20 ft.-lb.
	1/2”	75 ft.-lb.	50 ft.-lb.
	3/4”	270 ft.-lb.	180 ft.-lb.
	M5	61 in.-lb.	36 in.-lb.
	M6	9 ft.-lb.	62 in.-lb.
	M8	22 ft.-lb.	13 ft.-lb.
	M10	44 ft.-lb.	25 ft.-lb.
	M12	70 ft.-lb.	40 ft.-lb.

Maintenance

Keep the machine in top condition by closely following the maintenance schedule. Maintenance intervals given are for average operating conditions. Machines used in severe environments may require service more often. In general:

- Keep the fuel tank filled (gasoline and diesel). This helps to reduce condensation and moisture entering the fuel system.
- Refer to the engine service manual for recommended engine service intervals and procedures.

Caution! ***Do not pressure-wash the operator instrument panel, electrical components or engine compartment area.***

Recommended Service Materials

- Engine Oil (refer to your engine manual)
- Hydraulic oil – Mobil Multi Purpose ATF or equivalent Dexron III fluid
- Manufacturer-recommended coolant (antifreeze) 50/50 mix
- Lithium-base grease
- Loctite® (or equivalent) thread sealant in the appropriate grades
- Anti-seize compound

Maintenance Schedules

Note: *Refer to the* ***Maintenance Item Locations*** *drawing following the* ***Maintenance Schedules****.*

Daily Maintenance

Maintenance Item	Location Number	Procedure
Engine	2	Check the engine oil level
	13	Check the engine coolant level
	4	Check for coolant leaks, radiator core blockage
	11	Check the air cleaner
	9	Check for LP/diesel odor at connections
	10	Check the water separator (diesel, if so equipped)
Hydraulic system	3	Check the oil level in the hydraulic oil reservoir
		Check for any hydraulic leaks
	12	Check the hydraulic oil filter
Recovery tank	16	Drain and clean the inside of the tank; flush with clean water
	16	Check the cover perimeter gasket for damage/wear
Hopper	1	Clean the hopper panel filter and inspect for damage (VD only)
	7	Check the clean side of the panel filter for leakage (VD only)
Scrub brushes	6, 18	Check for debris wrapped around the brushes/brooms, and for damage/wear; adjust as necessary
Main and side brooms		
Main broom chamber	5	Check all flaps for wear or damage
Parking brake and foot pedal brake	8	Check for correct operation of brakes; adjust as needed

Weekly Maintenance/Every 50 Hours

Maintenance Item	Location Number	Procedure
Engine	25	Change crankcase oil (new or reconditioned diesel)
	26	Change oil filter (new or reconditioned diesel)
	20	Check the fan belt tension and tighten as necessary
	Perform recommended engine maintenance (see applicable engine manual).	
Battery	21	Check the battery electrolyte level (unless it is a maintenance-free battery)
	21	Check the battery cables and connections
Solution tank	14	Clean the solution tank
	15	Clean the pump inlet strainer
Recovery tank	16	Clean the recovery tank and tank lid
	17	Clean the solution inlet filter (ESP/Recycle option only)
Scrub Brushes	18	Check for wear and damage
Main broom	23	Check for wear and damage
	23	Rotate end-for-end
Rear and side squeegees	19	Check for wear and damage
Hydraulic hoses	22	Check for wear, cuts or leakage
Hopper	24	Clean or replace the hopper panel filter (Variable Dump only)

Maintenance Every 100 Hours

Maintenance Item	Location Number	Procedure
Engine	Perform recommended engine maintenance (see applicable engine manual).	
Drive wheel and steering components	27	Make sure to grease the fittings on the rear wheel support and on the steering rack guide. (Refer to the ***Steering System, Maintenance*** section and the Parts List.)
Front wheel bearings	28	Lubricate
All moving joints	29	Lubricate
Brake pads	30	Check for wear and adjust as necessary. (Refer to the ***Wheel System, Non-traction*** section and the Parts List.)
Bushings	31	Lubricate all bushings with Loctite® Silver Grade Anti-Seize compound. Note that the bushings are located on the steering, scrub deck lift, squeegee lift, main broom lift, both threaded ends of the throttle cable and on the variable dump door cylinders. (Refer to the relevant sections in this manual and the Parts List.)

Maintenance Every 200 Hours

Maintenance Item	Location Number	Procedure
Engine	25	Change the crankcase oil (Gas and LPG)
	26	Change the engine oil filter (Gas and LPG)

Maintenance Every 250 Hours

Maintenance Item	Location Number	Procedure
Engine	25	Change the crankcase oil (diesel)
	26	Change the engine oil filter (diesel)
	34	Replace the air filter element
	35	Flush the radiator coolant system
	36	Clean or replace the spark plugs (Gas/LPG only)
	37	Check the distributor cap and wires (Gas/LPG only)
	38	Clean and lubricate the governor linkage (diesel only)
	39	Replace the fuel filter
	Perform any additional recommended engine maintenance (see engine manual if applicable).	
	Inspect and drain any oil buildup from the LP fuel system electronic pressure regulator (EPR), (LPG only).	
Hydraulic system	40	Replace the hydraulic filter element
Squeegee casters	32	Lubricate
Solution tank	14	Clean the solution tank
	33	Clean the pump inlet strainer

Maintenance Every 400 Hours

Maintenance Item	Location Number	Procedure
Engine	Perform any additional recommended engine maintenance (see engine manual if applicable).	
Hydraulic system	41	Clean the hydraulic reservoir
	42	Clean the hydraulic intake strainer
	43	Change the hydraulic fluid

***Note:** *The engine maintenance schedule shown lists the recommended engine service intervals. Refer to the* **Other Reference Manuals and Information Sources / Engine Manufacturers' Technical Manuals** *section for list of available engine manufacturers' service manuals. Refer to these manuals for more complete maintenance and service information and instructions.*

Maintenance Item Locations

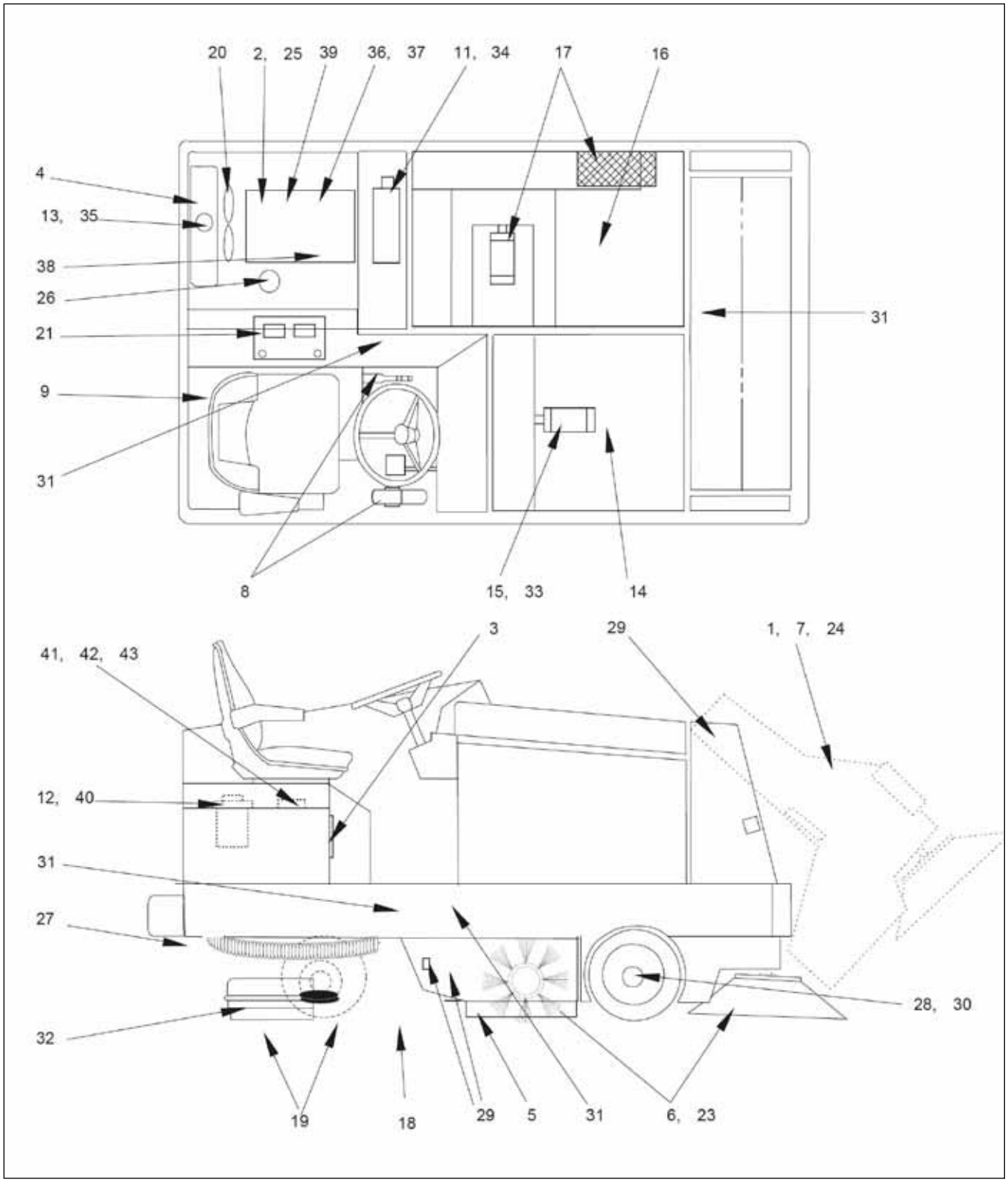

Lubrication Locations

Note: *Use a good grade multipurpose grease. Avoid using too much grease.*

Lubrication Every 100 Hours

Location Number	Procedure
1	Lubricate the drive wheel swivel, wheel bearings and steering rack guide
2	Lubricate the front wheel bearings
3	Lubricate all moving joints
4	Lubricate all bushings with Loctite® Silver Grade Anti-Seize compound. Note that the bushings are located on the steering, scrub deck lift, squeegee lift, main broom lift, both threaded ends of the throttle cable and on the variable dump door cylinders. (Refer to the relevant sections in this manual and the Parts List.)

Lubrication Every 250 Hours

Location Number	Procedure
5	Lubricate the squeegee casters
6	Clean and lubricate the governor linkage (diesel only)

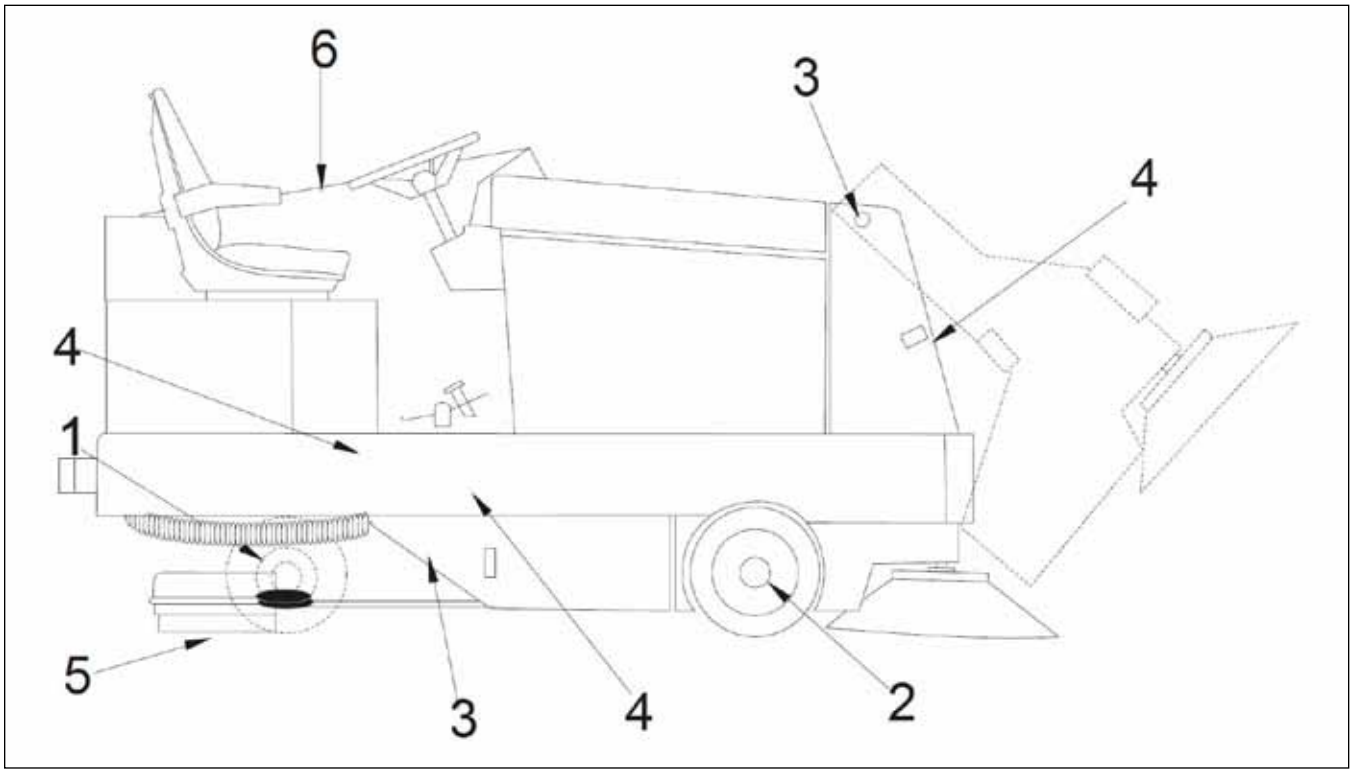

Advance 7765 and Nilfisk CR1500
PM Checklist

Customer _____

Address _____

City _____ **St** _____ **Zip** _____

Model _____ **Serial** _____ **Hours** _____

Defect Codes

A needs adjustment
B binding
C dirty or contaminated
D damaged, bent or torn
L leaks
M missing
W worn out

Ref	OPERATIONAL INSPECTION ITEMS	OK	Defect Codes (circle)	Does Not Work
1	Engine low speed: GM - 800 RPM, Mitsubishi - 950		A rough	
2	Operational speed (run switch setting): GM - 2000 RPM, Mitsubishi - 2050 RPM		A low power	
3	Drive pedal linkage (check for forward/reverse drive and any neutral creep)		A B	
4	Drive system performance (max. forward speed) – 115 RPM		Noisy sluggish	
5	Brakes (check both service and parking)		A B W	
6	Steering		excessive play	
7	Side sweep broom raise/lower (if equipped)		A B	
8	Side broom on/off		B L	
9	Scrub deck (raise/lower)		<----->	
10	Scrub brushes on/off		L	
11	Scrub Brush pressure settings (normal and heavy)		A B	
12	Solution control (on/off and flow volume)		A L	
13	Detergent solution pump (ESP/Recycle option only)		L	
14	Squeegee system (raise/lower and auto lift in reverse)		<----->	
15	Vacuum system performance (sealed water lift 30" [76 cm] @ rated engine speed)		C L	
16	Headlights, gauges and (optional) accessories		<----->	
17	Seat adjustment lever		<----->	

Ref	VISUAL INSPECTION ITEMS	Comments	OK	Defect Codes (circle)	Does Not Work
18	Main broom motor			B L	
19	Main broom bristles	min. length 3 inches		A B D W	
20	Side broom motor			B L	
21	Scrub brush motors (3)			B L	
22	Scrub brushes, check for wear and rotate	min. length ½ inch		D W	
23	Scrub deck housing and door skirts			C D W	
24	Solution pump (ESP/Recycle option only)			C L W	
25	Solution tank, delivery hoses and pump inlet strainer	clean strainer		C L M	
26	Solution tank drain plug assembly and drain hose			C D L M	
27	Vacuum fan motor and vacuum hose			C L D	
28	Recovery tank lid gasket			B C L	
29	Recovery tank float switch			D L W	
30	Recovery tank drain plug assembly and drain hose			C D L M	
31	Recovery tank solution inlet filter (ESP/Recycle option only)	clean filter		C L D	
32	Squeegee vacuum hose	back flush		C D L	

Ref	VISUAL INSPECTION ITEMS (continued)	Comments	OK	Defect Codes (circle)	Does Not Work
33	Squeegee tool and blades	clean and rotate		C D W	
34	Squeegee casters, leveler adjustment knob and linkage	grease		C W	
35	Hydraulic lift cylinders (scrub deck and squeegee)			B L	
36	Hopper lift and dump hydraulic cylinders			B L	
37	Battery	clean and water		C	
38	Engine, oil level, hoses and belts			C D L	
39	Engine air cleaner element (inner and outer)	check service indicator		C L	
40	Engine coolant level	fill at reservoir		C L	
41	Radiator and oil cooler core blockage	clean		C D L	
42	Hydraulic oil reservoir level - Mobil Multi Purpose ATF or equivalent Dexron III fluid	check sight gauge		C L	
43	Hydraulic system hoses and fittings			D L	
44	Hydraulic system filter			C L	
45	Wheel drive pump tow (bypass) valve			B D	
46	Drive and accessory pumps			L	
47	Foot pedal/drive pump forward/reverse controls			A B D	
48	Gasoline/Diesel fuel tank, filter and lines			C L W	
49	LP tank, hoses and fittings			L W	
50	LP fuel filter	service life 400 Hrs		C	
51	LPG vaporizer	Remove oil buildup every 150 hours or 120 days		C	
52	LP fuel regulator, lock-off valve and hoses			L	
53	Diesel glow plug function light	hard starting		<----->	
54	Gasoline and Diesel fuel tank strainer	yearly		C	
55	Brake cable and parking brake pedal			A B	
56	Circuit breaker panel (reset circuit breakers as necessary)			<----->	
57	Drive wheel (check lug nut torque 100 ft-lbs/135 Nm)			A	
58	Drive wheel motor, steer spindle, rack and cylinder	grease pinion and rack		D L W	
59	Front and rear tires	tread wear		C W	
60	Hopper	clean		C	

Note: For additional service information see the Service Manual, form number 56043160, and Instructions for Use, form number 56041801 (7765); or 56041714, 56041715, 56041716, 56041717, 56041718 and 56041719 (CR1500).

Defect Codes

A needs adjustment
B binding
C dirty or contaminated
D damaged, bent or torn
L leaks
M missing
W worn out

WORK COMPLETED BY:

ACKNOWLEDGED BY:

Service Technician Signature _____ Date _____

Customer Signature _____ Date _____

General Machine Overview

Major Machine Components

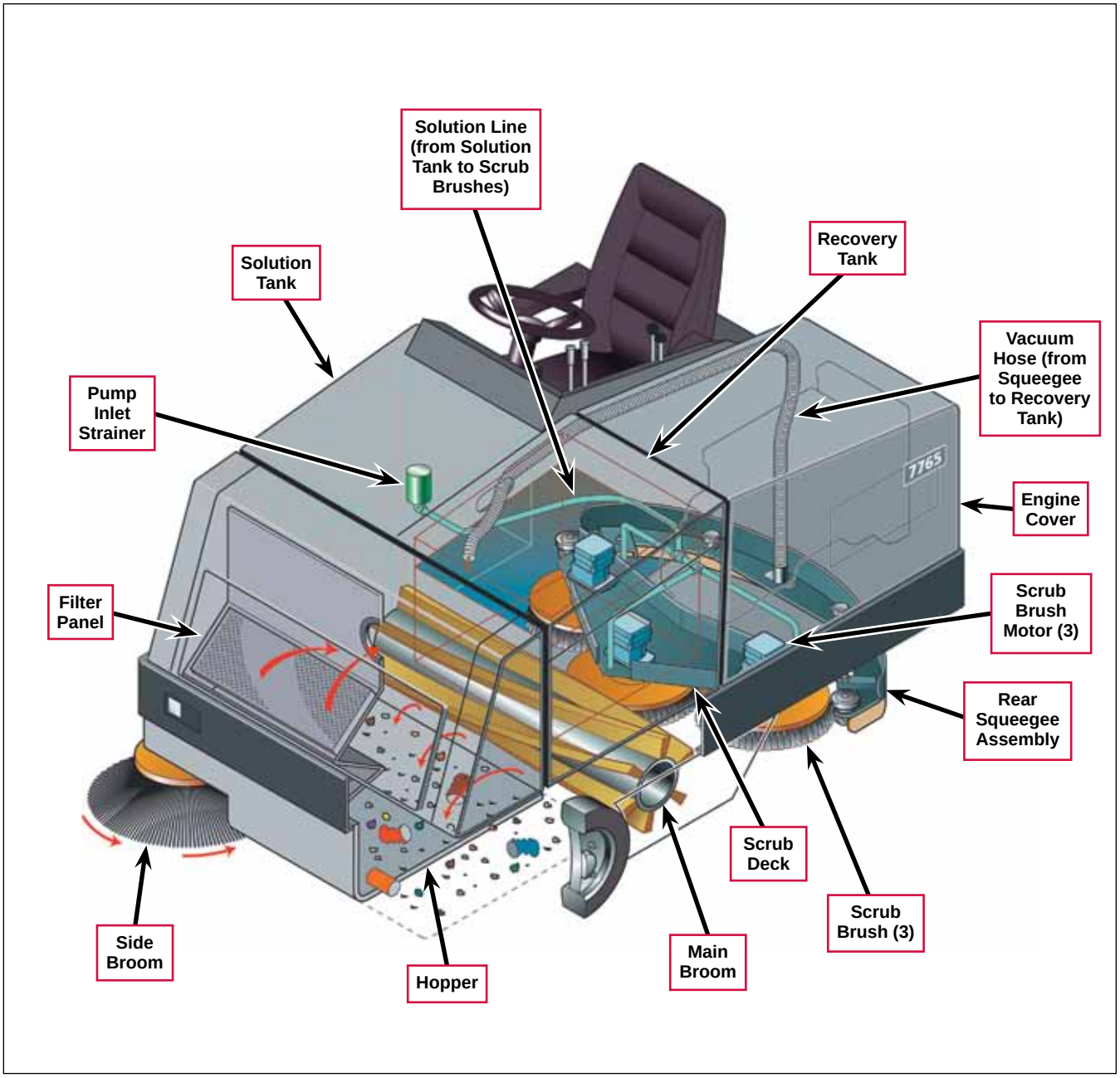

Machine Controls

Engine Controls

- **Ignition Switch** – main power/ignition switch, functions as follows:
  - Turning the key to the full clockwise "start" position will start the engine. Note that this is a momentary position and the key will return to the "ignition on" position when released.
  - When the key is in the "ignition on" position, the engine will run and the horn, light options, turn signals and instrument panel gauges will operate.
  - When the key is turned to the center "off" position, the engine will shut off, but the horn and light options will still operate.

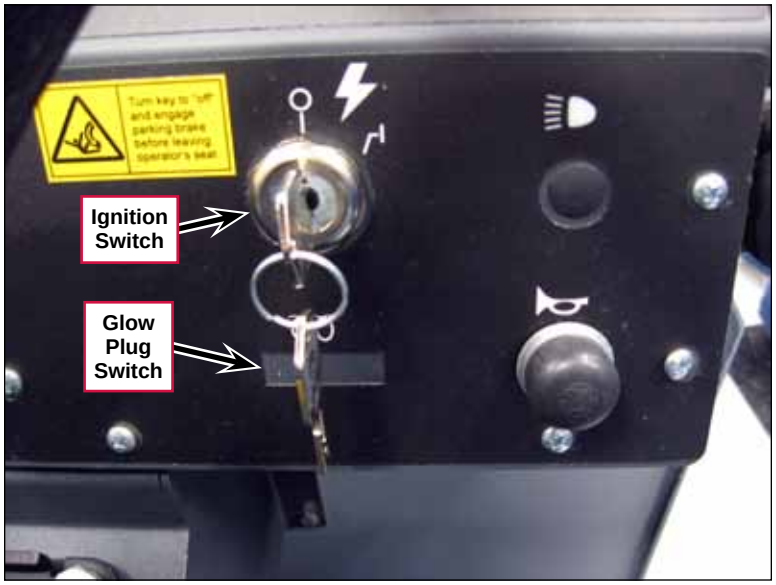

- **Glow Plug Switch** – (location only shown), diesel only.

- **Throttle Switch (Gasoline/LPG)** – toggles the engine between idle (turtle icon) and operating speed (rabbit icon).
- **Throttle Lever (Diesel)** – (location only shown) sets the engine speed from idle (turtle icon) to operating speed (rabbit icon).
- **Check Engine Light (Gasoline/LPG)** – lights to alert Operator of a problem with the engine.

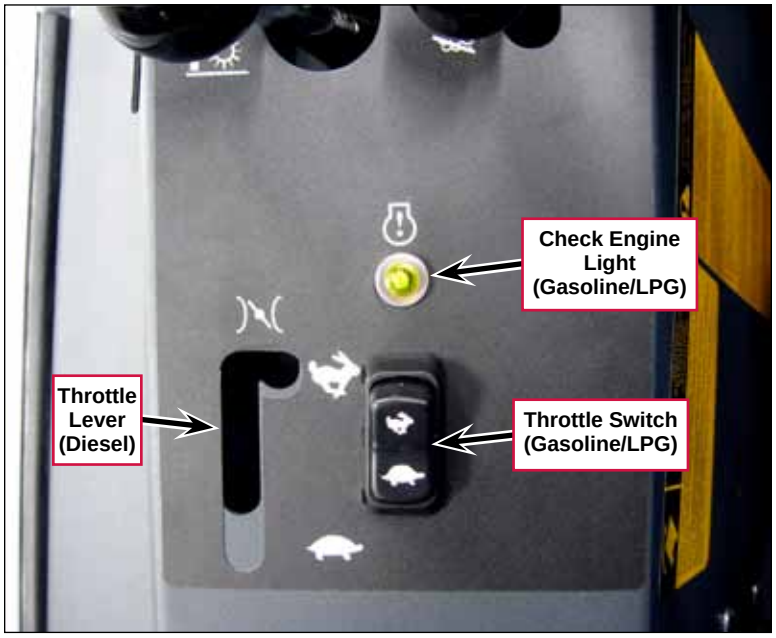

Gauges and Meters

- **Water Temperature Gauge** – displays the engine coolant temperature.
- **Low Fuel Warning Light** – (LPG only) indicates a low-fuel condition.

  Note that gas and diesel models have a fuel gauge with an indicator needle.

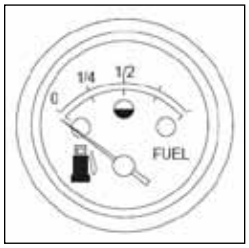

- **Voltmeter** – displays the battery charge level.
- **Hour Meter** – displays the accumulated machine run time.
- **Oil Pressure Gauge** – displays the engine oil pressure in psi.

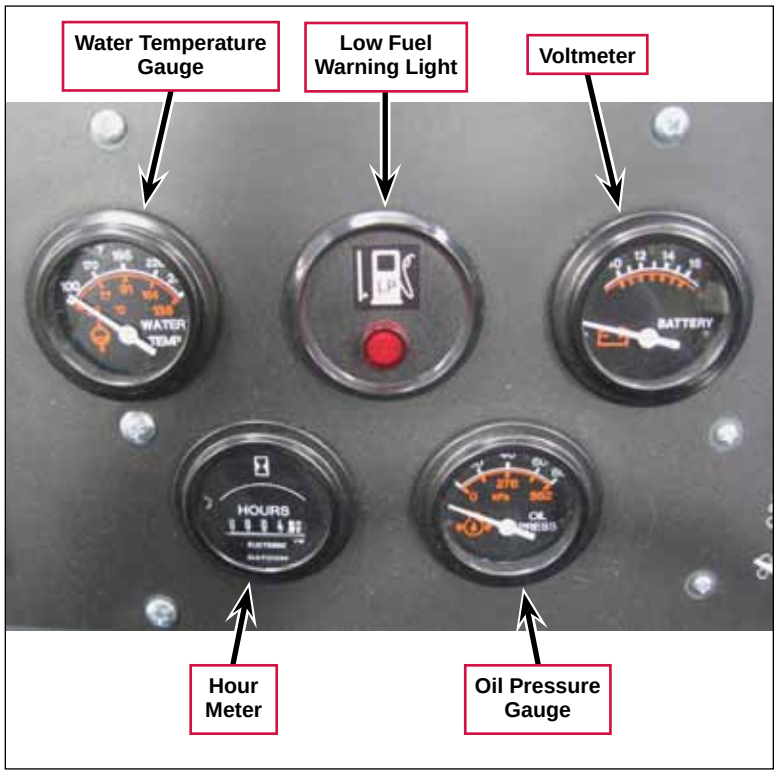

Solution Control and Indicator

- **Solution Control Lever** – controls the solution flow via a mechanical linkage connected to a ball valve in the solution supply line. The solution flow rate is continuously variable from **No Flow** (**Solution Control Lever** by the narrow white line) to a maximum of **3½ GPM** (**Solution Control Lever** by the wide white line).

Note: *Unless the machine is equipped with the Solution Off in Neutral Option, the solution system will put solution onto the floor regardless of whether or not the machine is driving forward or backward.*

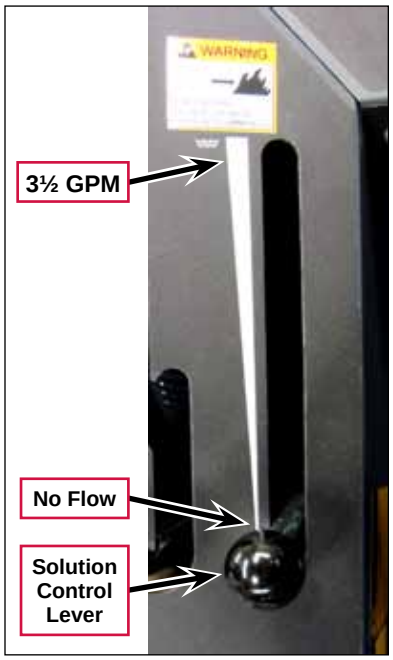

- **Low Solution Warning Light** – lights to indicate that the solution tank is empty.

Low Solution Warning Light

ESP/Recycle Option Controls and Indicators

- **Recycling System ON/OFF** switch – switches the optional ESP/Recycling system on and off.
- **High Solution** – lights to indicate that the water level in the solution tank is too high.
- **Low Detergent** – lights to indicate that the detergent level in the detergent tank is low.
- **Detergent Flow** – controls the detergent flow rate. Note that this control is a rheostat (two-terminal potentiometer) that varies the voltage to the detergent pump to control the pump speed/detergent output.

Scrub System Controls

- **Scrub Brush Lift Switch** – controls the scrub deck and scrub brush motors as follows.
  - Pressing the switch to the “lower” position will lower the scrub deck and switch on the three scrub brush motors.

  - Pressing the switch to the “raise” position will raise the scrub deck and switch off the three scrub brush motors.

- **Brush Pressure Switch** – controls the scrub deck pressure as follows. Note this switch will only function with the **Scrub Brush Lift Switch** in the “lower” position, and will light when the “heavy” scrub pressure is selected.
  - Pressing the switch to the “single-bar” position will select the “normal” scrub pressure.

  - Pressing the switch to the “two-bar” position will select the “heavy” scrub pressure.

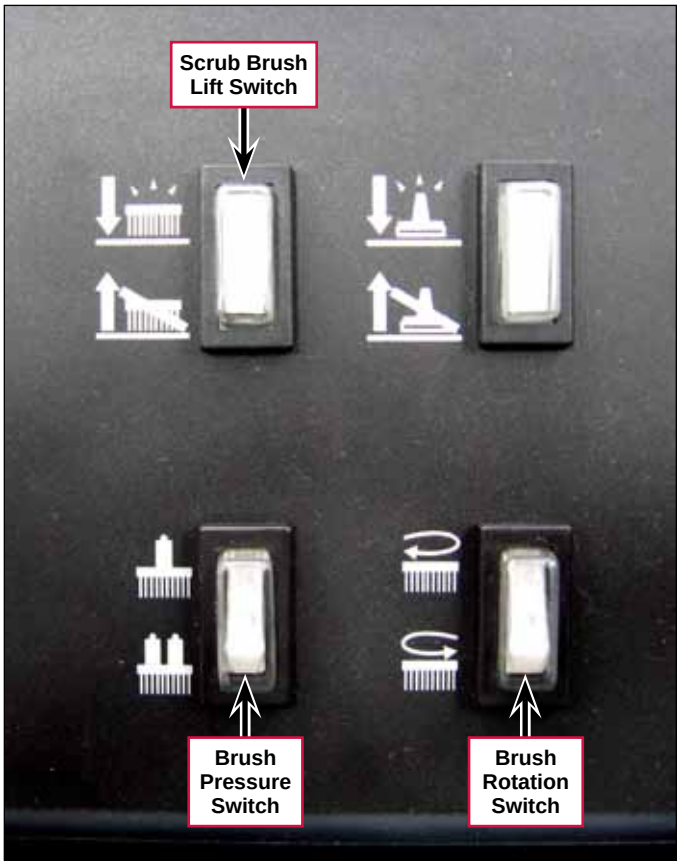

- **Brush Rotation Switch** – controls the scrub brush rotation direction as follows. Note that this switch will only function with the **Scrub Brush Lift Switch** in the “lower” position, and will light when set to the lower (reverse) position.
  - Pressing the switch to the upper position will run the scrub brushes in the forward direction.

  - Pressing the switch to the lower position will run the scrub brushes in the reverse direction.

Squeegee and Recovery System Controls

- **Squeegee Blade Switch** – controls the squeegee and recovery vacuum motor as follows.
  - Pressing the switch to the “lower” position will lower the squeegee and switch on the recovery system vacuum motor.

  - Pressing the switch to the “raise” position will raise the squeegee and switch off the recovery system vacuum fan motor.

Note: *A proximity switch adjacent to the drive foot pedal will automatically raise the squeegee and shut off the vacuum motor when the pedal is moved to the reverse position.*

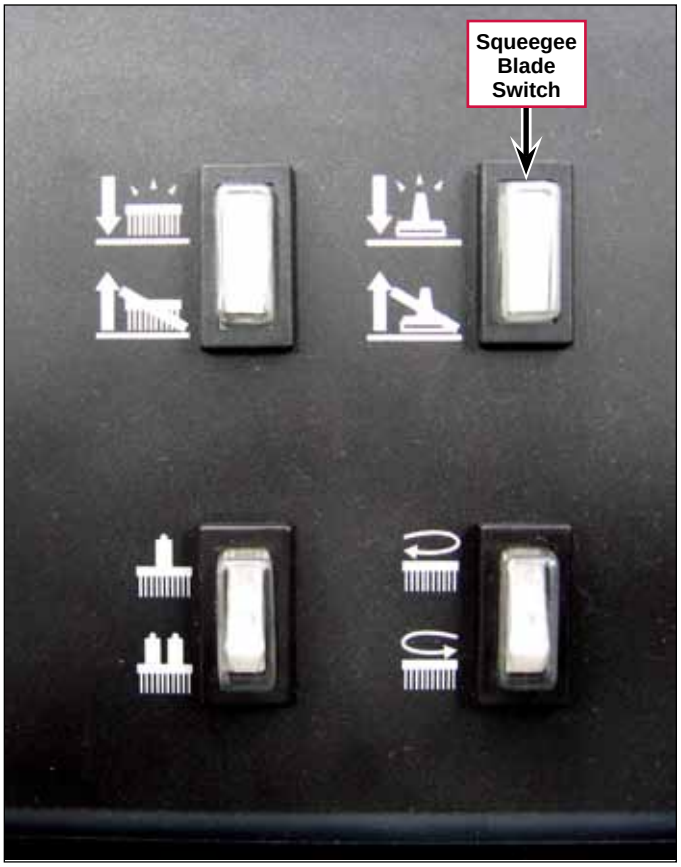

- **High Recovery Warning Light** – lights approximately five minutes before the recovery tank is full to allow time to complete the scrubbing cycle before the float switch shuts off the vacuum to the recovery tank.

High Recovery Warning Light

Main Broom Controls

- **Main Broom Switch** – switches the main broom motor on and off as follows:
  - Pressing the switch to the “on” (upper) position will switch on the main broom.

  - Pressing the switch to the “off” (lower) position will switch off the main broom.

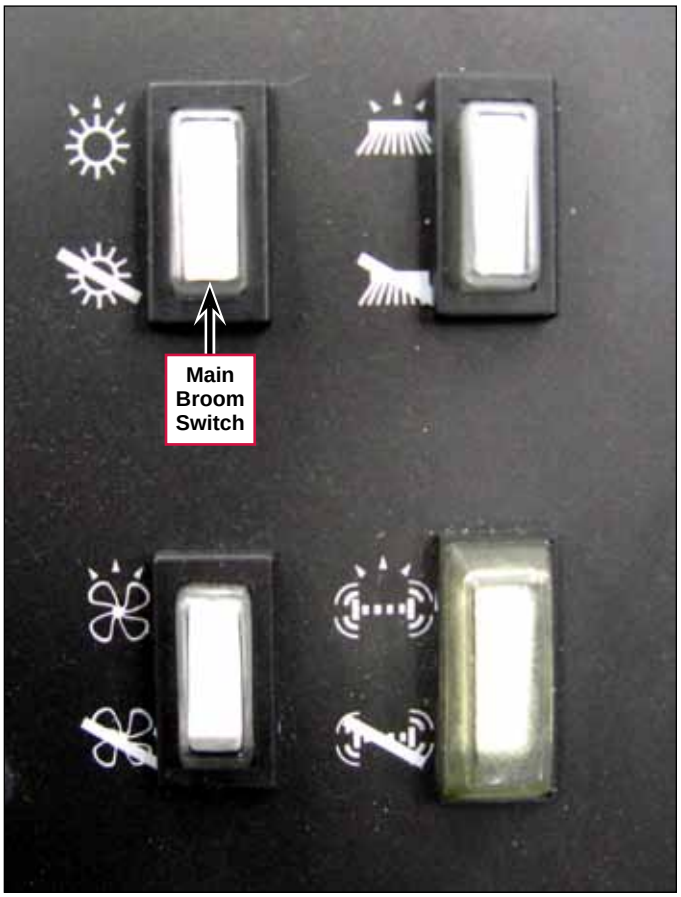

- **Main Broom Lift Control** – this lever lowers and raises the main broom, via a mechanical linkage, to the following three positions:
  - Moving the **Main Broom Lift Control** to the **Float Position** will allow the main broom to “float” on the floor under its own weight. This setting produces a 4”-5” [10-13 cm] broom pattern and is used for heavy sweeping or irregular surfaces.
  - Moving the **Main Broom Lift Control** to the **Sweep Position** lowers the main broom to the normal sweep position and produces a 2”-3” [5-8 cm] broom pattern.
  - Moving the **Main Broom Lift Control** to the **Raised Position** lifts the main broom up off of the floor.

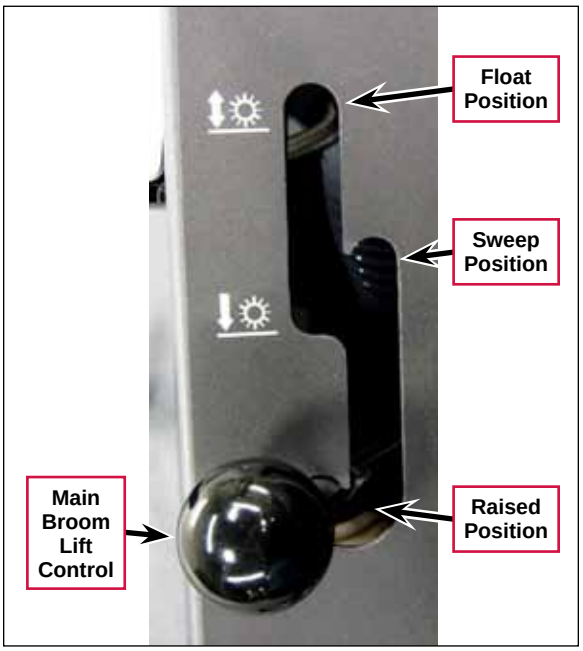

Side Broom Controls

- **Side Broom Switch** – switches the side broom motor on and off as follows:
  - Pressing the switch to the “on” (upper)  position will switch on the side broom.
  - Pressing the switch to the “off” (lower)  position will switch off the side broom.

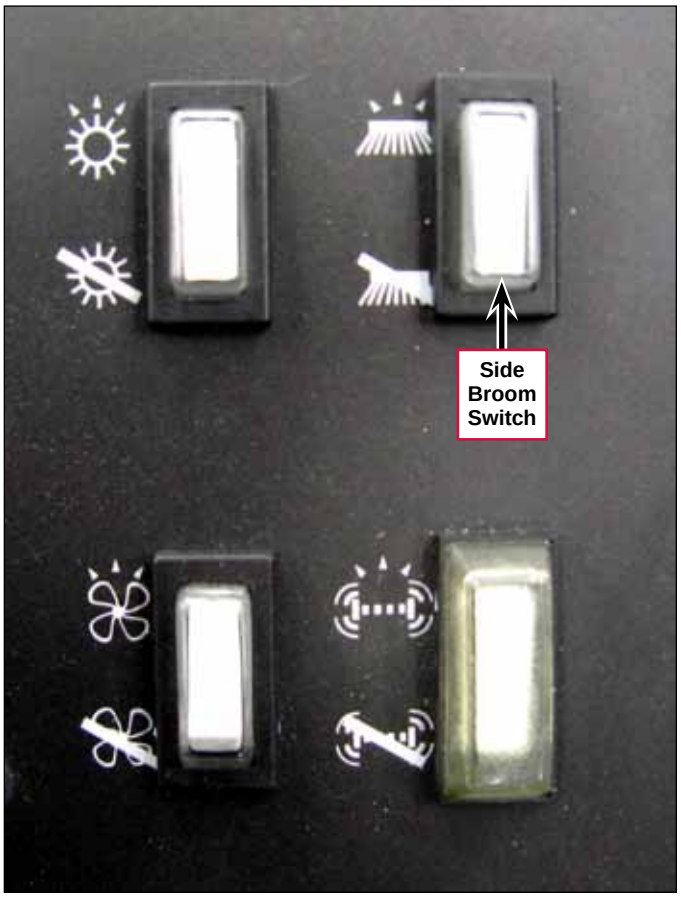

- **Side Broom Lift** – raises and lowers the side broom via a cable actuated by the **Side Broom Lift Knob**.
  - To raise the side broom, press the **Lock Button**, pull the **Side Broom Lift Knob**, then release the **Lock Button**.
  - To lower the side broom, press the **Lock Button**, push the **Side Broom Lift Knob** forward, then release the **Lock Button**.

Hopper Controls (Variable Dump models)

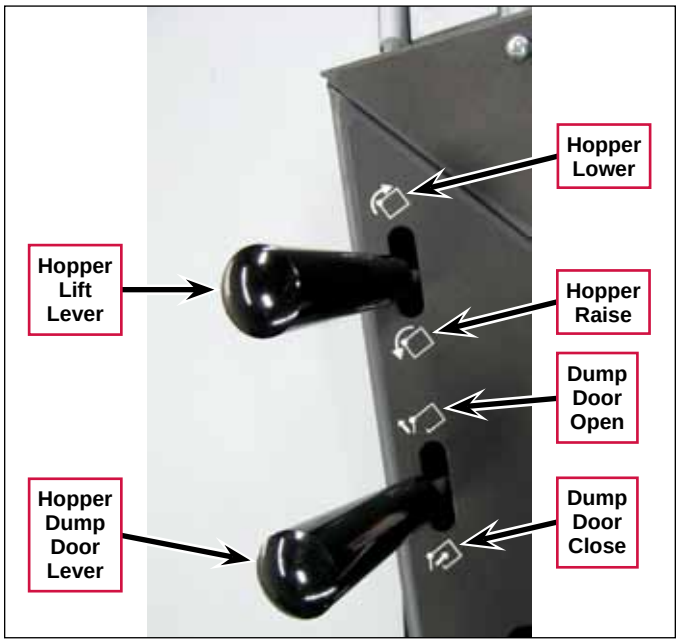

- **Hopper Lift Lever** – mechanically actuates the hydraulic valves for the hopper lift cylinder to raise and lower the hopper as follows:
  - Moving the **Hopper Lift Lever** to the **Hopper Raise** position will raise the hopper.
  - Moving the **Hopper Lift Lever** to the **Hopper Lower** position will lower the hopper.
- **Hopper Dump Door Lever** – mechanically actuates the hydraulic valves for the dump door cylinder to open and close the hopper dump door as follows:
  - Moving the **Hopper Dump Door Lever** to the **Dump Door Open** position will open the hopper dump door.
  - Moving the **Hopper Dump Door Lever** to the **Dump Door Close** position will close the hopper dump door.

Note: *The main broom, side broom, dust control motor and filter shaker will turn off automatically when the hopper is dumping and/or the dump door is in the closed position.*

Dust Control and Filter Shaker Controls (Variable Dump models)

- **Dust Control Switch** – wet sweep bypass (optional on VD machines); switches the hydraulic dust control vacuum fan motor on and off as follows:
  - Pressing the switch to the "on" (upper)  position will switch on the dust control motor whenever the main broom is also operating.
  - Pressing the switch to the "off" (lower)  position will switch off the dust control motor.
- **Filter Shaker Switch** – switches the electric filter shaker motor on and off as follows:
  - Pressing the switch to the "on" (upper)  position will switch on the shaker motor.
  - Pressing the switch to the "off" (lower)  position will switch off the shaker motor.

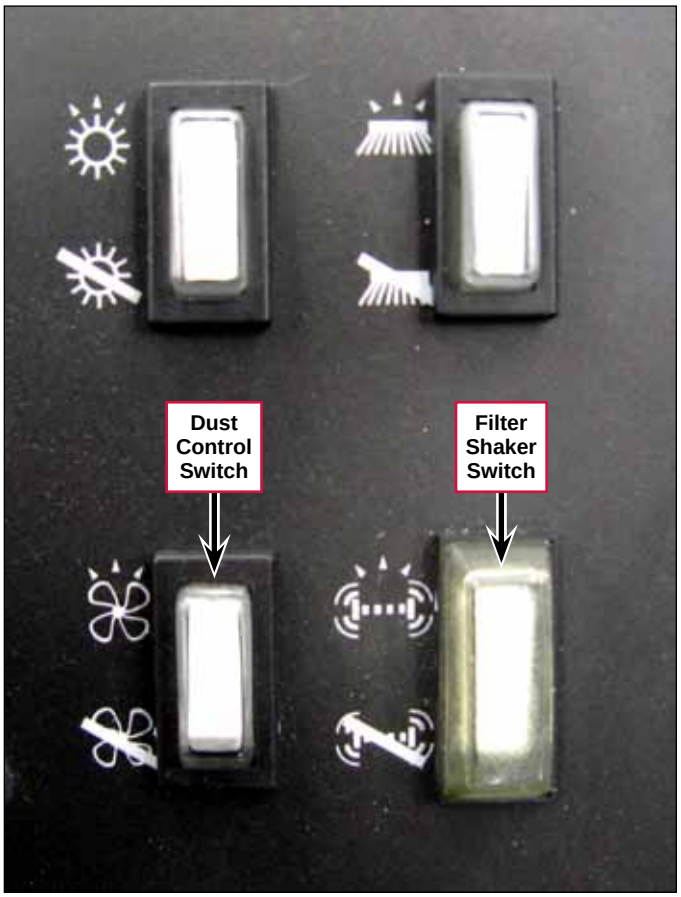

Miscellaneous Controls

- **Horn Push Button** – sounds the horn when pressed.
- **Light Switch** – (location only shown) switches on the head lights, tail lights and instrument lights (if the machine is so equipped).
- Turn Signal – (optional, not shown). The turn signal lever is located on the steering column and works the same as automotive turn signals; forward on the lever for right and back on the lever for left. The four-way flashers will activate when the turn signal lever is pulled out.

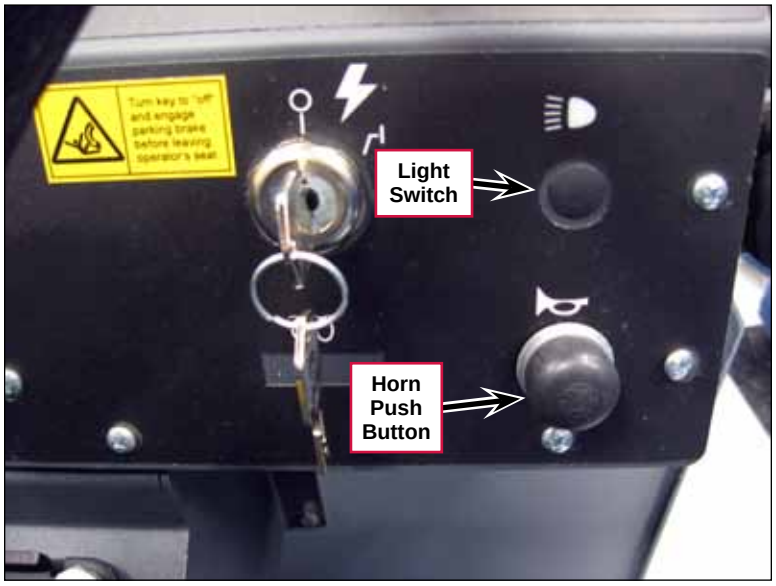

- **Foot Brake Pedal** – actuates the front wheel brakes mechanically when depressed.
- **Accelerator and Directional Control Pedal** – controls the machine direction and speed.

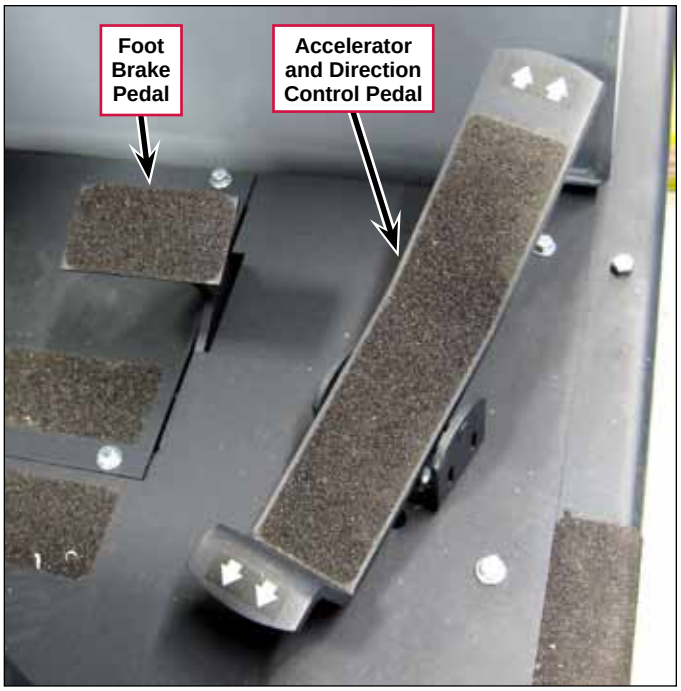

- **Parking Brake Lever** – raising the **Parking Brake Lever** to the upright position will "lock" the **Foot Brake Pedal** in the down position.

Dust Control System

Functional Description

Overview

The dust control system is installed on variable dump machines only, and reduces the dust in the air that is generated while sweeping.

The hydraulic dust control vacuum fan motor drives an impeller that pulls the air and dust up from the **Hopper** and through a **Panel Filter**. (The curved black arrows show the airflow.) The **Panel Filter** traps the fine dust particles to minimize the dust in the air around the machine.

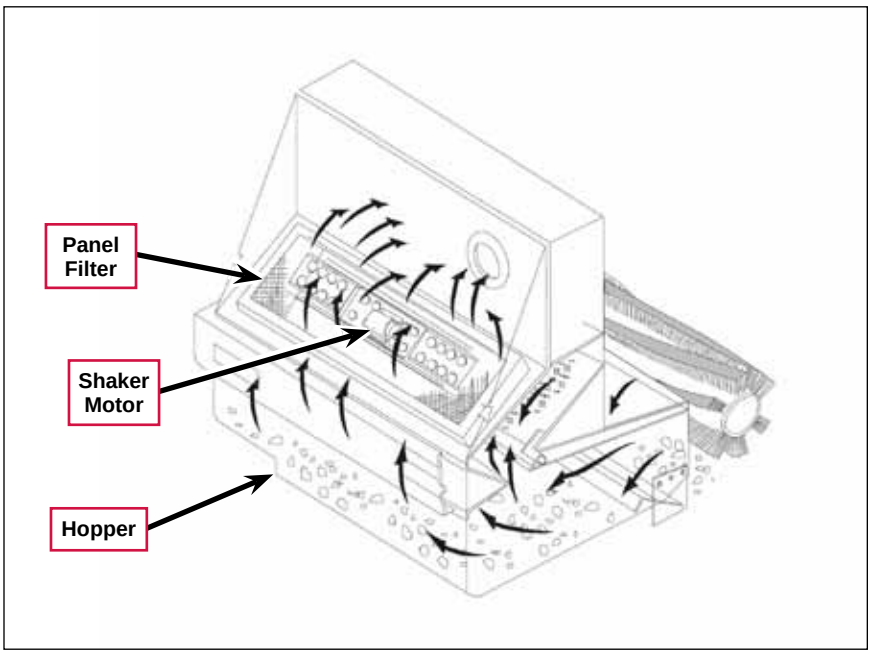

An electric **Shaker Motor**, controlled by the filter shaker switch on the instrument panel, vibrates the **Panel Filter** to dislodge dust clogging the **Panel Filter** to minimize maintenance and extend **Panel Filter** life.

Note that the **Hopper** and hopper door must be closed for the dust control motor and **Shaker Motor** to operate.

Refer to the ***Hopper System*** section for additional information.

Filter Assembly

The **Filter Shaker Motor Cover** fastens to the **Shaker Motor Plate** and holds the **Shaker Motor** in place.

The **Shaker Motor** rotates the **Filter Shaker Weight** which vibrates the **Shaker Motor Plate** and attached **Shaker Arms**. The **Shaker Arms** transfer the vibration to the **Panel Filter**.

The **Shaker Pivot Pin** suspends the **Shaker Motor Plate** and attached **Shaker Motor** and **Shaker Arms** on the **Filter Clamp Weldment**. This pivoting mounting provides a degree of rotational movement on the **Shaker Pivot Pin** to allow the generated vibration to be transferred to the **Panel Filter**.

The two **Knob Assemblies** fasten the **Filter Clamp Weldment** and attached components to the horizontal support plate on the front of the hopper.

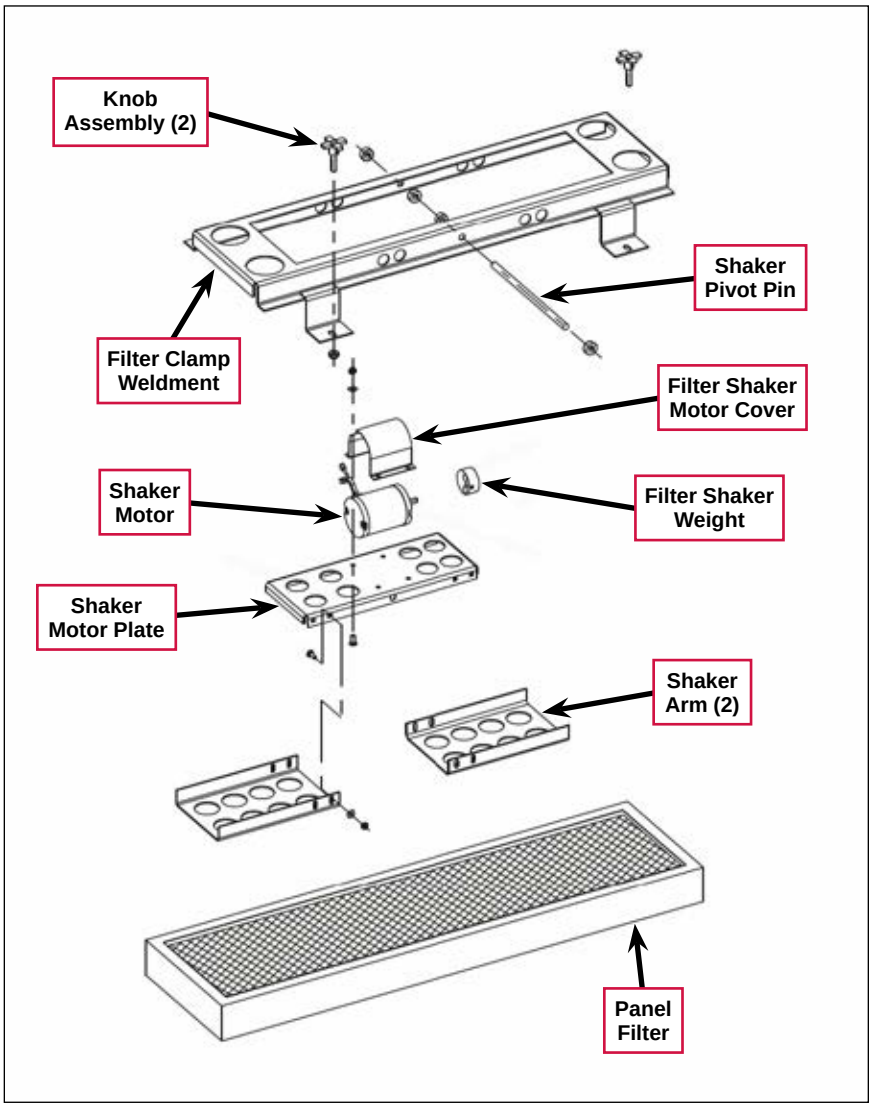

Dust Control Vacuum Fan Motor Assembly

The hydraulic **Dust Control Vacuum Fan Motor** drives the **Impeller** which creates the airflow through the hopper and **Panel Filter**.

The **Dust Control Vacuum Fan Motor** is fastened to the **Impeller Mounting and Guard Bracket**. The **Impeller Mounting and Guard Bracket** is mounted on the rear of the hopper.

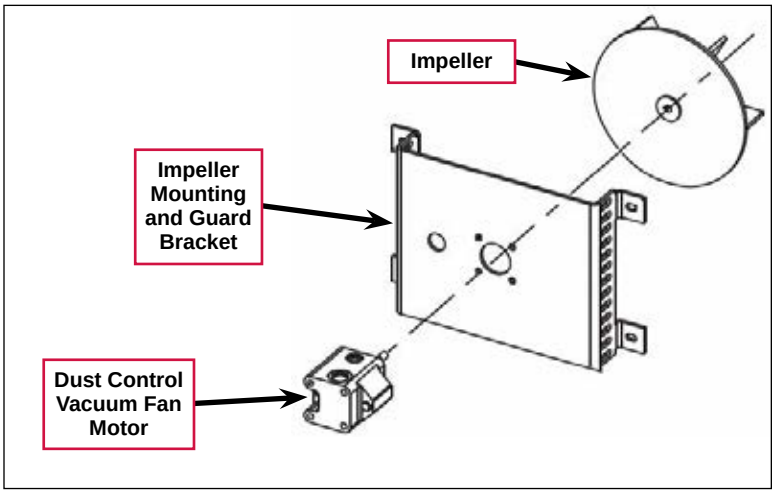

Dust Control Motor Valves

The **Main Broom Solenoid (2)** on the **Main Control Valve** controls the supply of hydraulic oil to the main broom and dust control vacuum fan motors.

When the **Main Broom Solenoid (2)** is energized it closes to direct the oil flow through **Port 1** on the **Main Control Valve**. The oil is directed through the main broom motor and dust control motor, then returns to **Port 2** on the **Main Control Valve**.

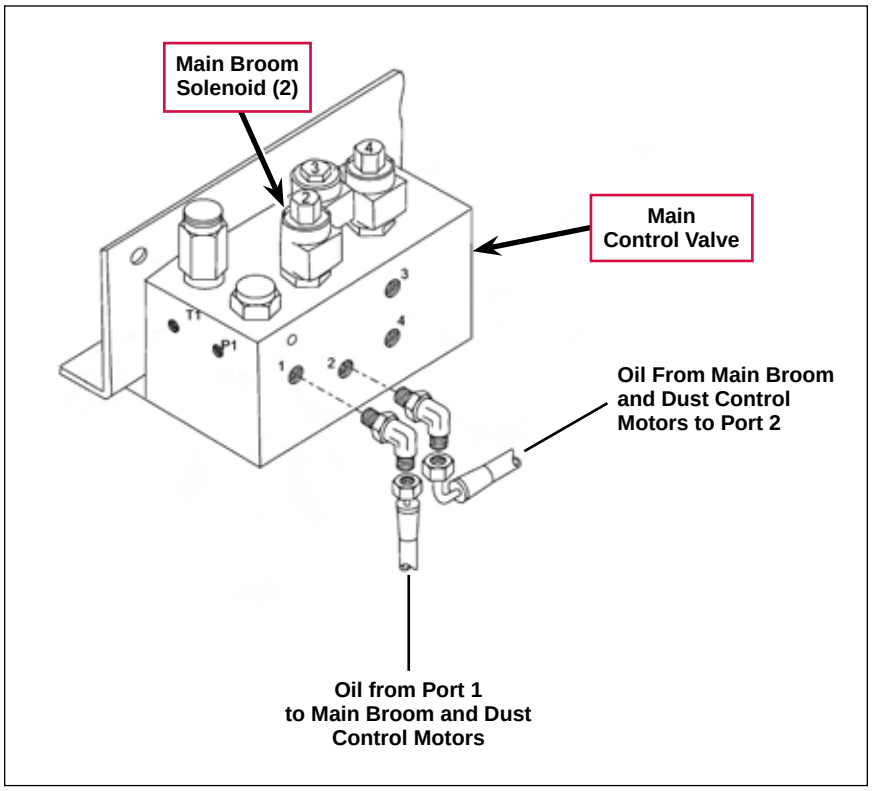

Machines equipped with the Wet Sweep Bypass Option have an additional **Dust Control Solenoid (1)** valve. The Wet Sweep Bypass Option allows you to operate the main broom with the dust control motor off.

- When the **Dust Control Solenoid (1)** valve is de-energized (open) it allows the hydraulic oil to flow from the discharge side of the main broom motor, through the **Dust Control Solenoid (1)** valve and to **Port 2** on the **Main Control Valve**, bypassing the dust control motor.
- When the **Dust Control Solenoid (1)** is energized it closes to direct the oil flow from the main broom motor through the dust control motor. The oil then returns to **Port 2** on the **Main Control Valve**.

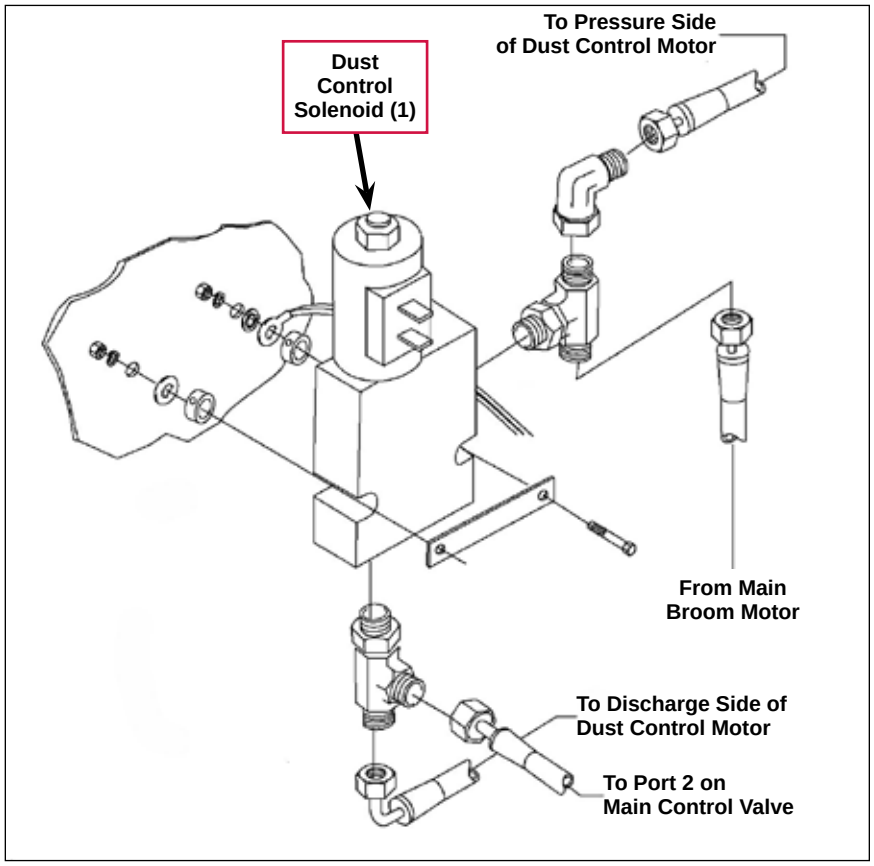

Dust Control System Wiring Diagram

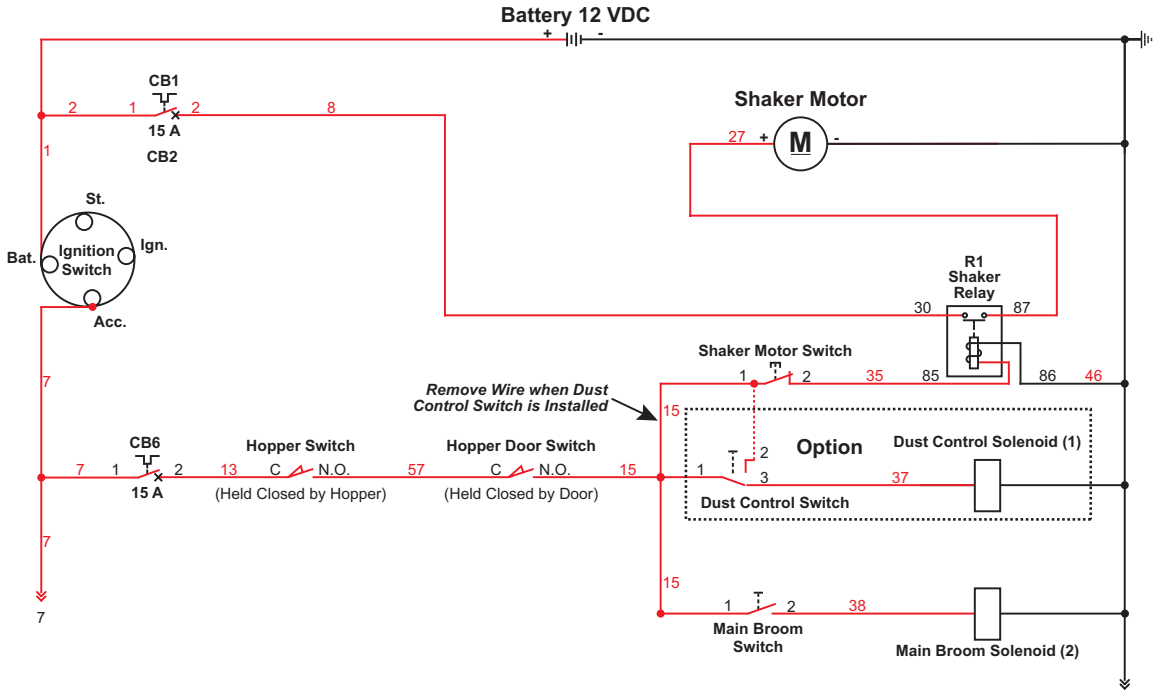

Electrical Circuit Description

The **Main Broom Solenoid (2)** controls the hydraulic oil flow to both the main broom motor and the dust control vacuum fan motor. The dust control motor will run when the **Ignition Switch** is on and the Operator turns on the **Main Broom Switch** on the instrument panel.

If the machine is equipped with the Wet Sweep Bypass Option:

- Setting the **Dust Control Switch** to the off position will de-energize the **Dust Control Solenoid (1)** to its normally-open position. This allows the oil to flow through the **Dust Control Solenoid (1)** valve and bypass the vacuum fan motor.
- Setting the **Dust Control Switch** to the on position will energize the **Dust Control Solenoid (1)** to its closed position. This directs the oil to the dust control motor.

Note that the **Hopper Switch** and the **Hopper Door Switch** must both be closed for the dust control vacuum fan motor, main broom motor and **Shaker Motor** to operate.

Shaker Motor Nominal Conditions

	Filter Shaker Switch On	Filter Shaker Switch Off
Wire	**Voltage**	**Voltage**
2	B+ Voltage	B+ Voltage
7	B+ Voltage	B+ Voltage
8	B+ Voltage	B+ Voltage
13	B+ Voltage	B+ Voltage
15	B+ Voltage (note 1)	B+ Voltage (note 1)

	Filter Shaker Switch On	Filter Shaker Switch Off
27	B+ Voltage	0 Volts(Off)
35	B+ Voltage	0 Volts(Off)
57	B+ Voltage (note 1)	B+ Voltage (note 1)
46 (ground)	0 Volts(Off)	0 Volts(Off)
Note 1: Conditions with Hopper Door fully open (indicated by Wire 57 = B+ Voltage) and Hopper fully down (indicated by wires 57 and 15 = B+ Voltage)		

Dust Control System Hydraulic Diagrams

Note: *On machines not equipped with the Wet Sweep Bypass Option, the dust control vacuum fan motor will run whenever the main broom motor is running.*

On machines equipped with the Wet Sweep Bypass Option, the dust control vacuum fan motor can be switched off independent of the main broom motor by switching off the Dust Control Switch.

Main Broom and Dust Control Motors Off

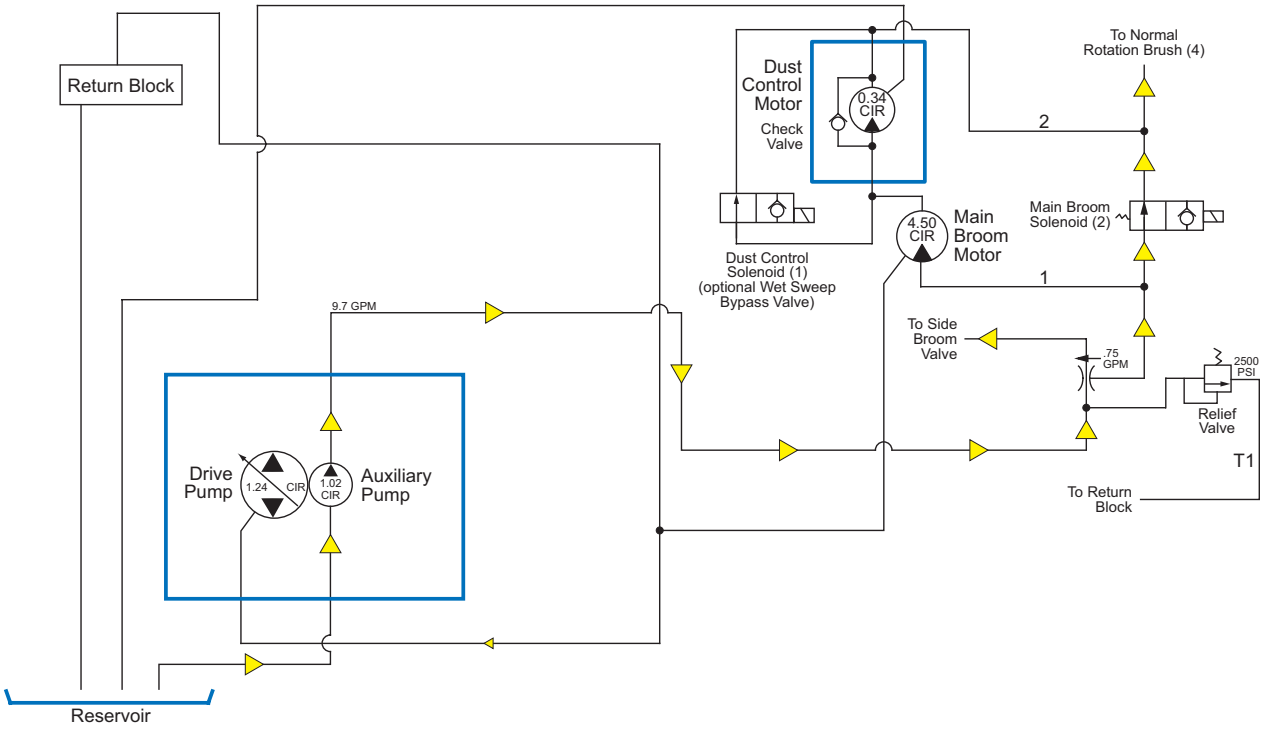

When the **Main Broom Motor** and **Dust Control Motor** are off, the **Main Broom Solenoid (2)** is de-energized (open). This allows the hydraulic oil to flow from the **Auxiliary Pump,** through the non-priority leg of the priority flow divider, through the open **Main Broom Solenoid (2)** valve and to the **Normal Rotation Brush (4)** solenoid valve. This bypasses both the **Main Broom Motor** and the **Dust Control Motor**.

Note that the oil flow path is the same whether or not the machine is equipped with the **Dust Control Solenoid (1)** that is included with the Wet Sweep Bypass Option.

Main Broom and Dust Control Motors On

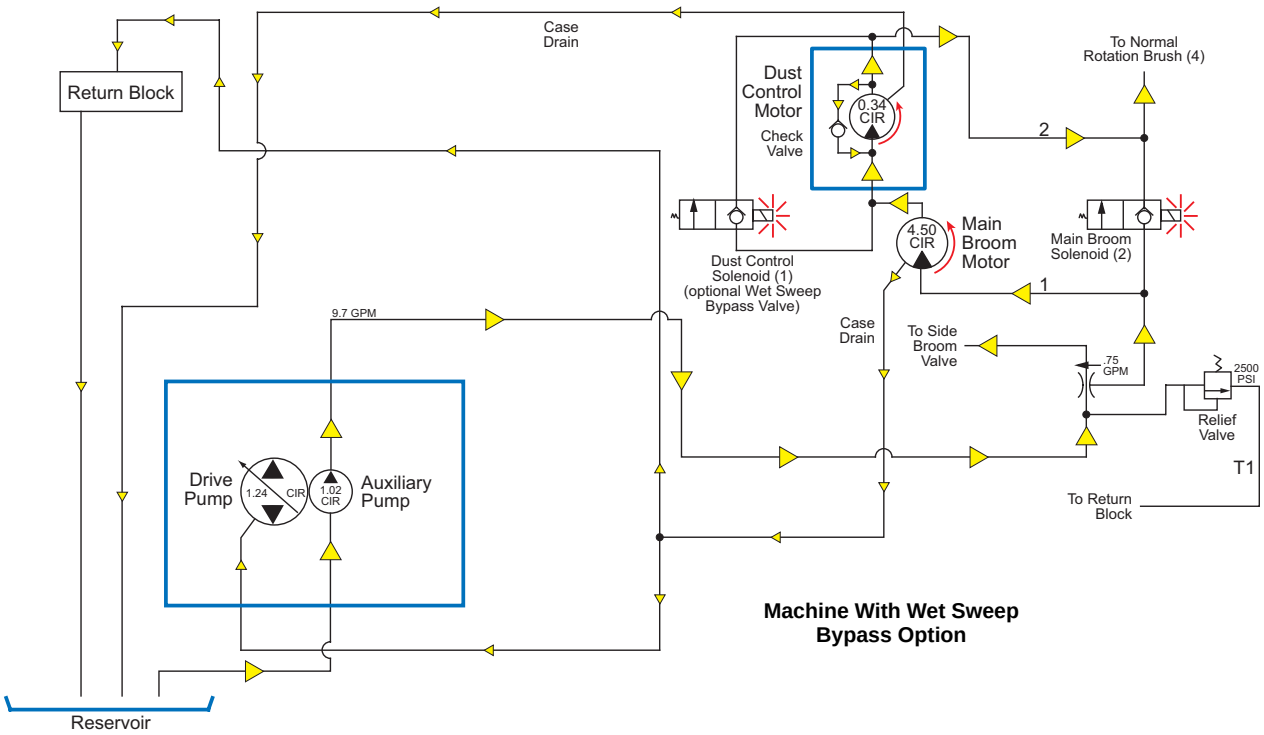

Machine With Wet Sweep Bypass Option

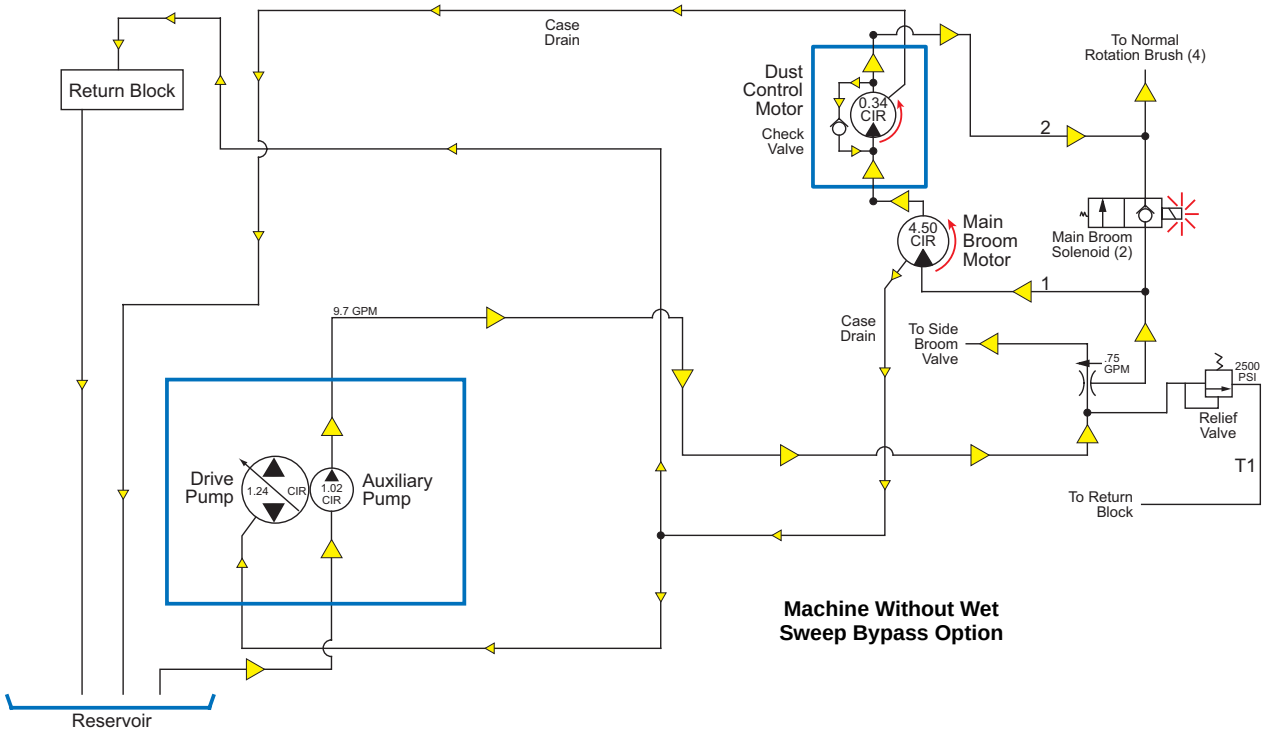

Machine Without Wet Sweep Bypass Option

When the **Main Broom Motor** and **Dust Control Motor** are running, the **Main Broom Solenoid (2)** is energized (blocked). This allows the hydraulic oil to flow from the **Auxiliary Pump,** through the priority flow divider, then to the **Main Broom Motor**. The oil from the discharge side of the **Main Broom Motor** is then directed to the **Dust Control Motor**. If the machine is equipped with the Wet Sweep Bypass Option (top drawing) and the Dust Control Switch is set to on, the **Dust Control Solenoid (1)** will be energized to direct the oil from the **Main Broom Motor** to the **Dust Control Motor**.

The **Check Valve** allows oil to circulate from the high-pressure side to the low-pressure side of the **Dust Control Motor** when the **Dust Control Motor** is switched off. This allows the high-speed **Dust Control Motor** to "coast" down and reduce its speed more gradually when it is shut off.

The **Case Drain** from **Dust Control Motor** goes directly back to reservoir.

Main Broom Motor On and Dust Control Motor Off (with Wet Sweep Bypass Option)

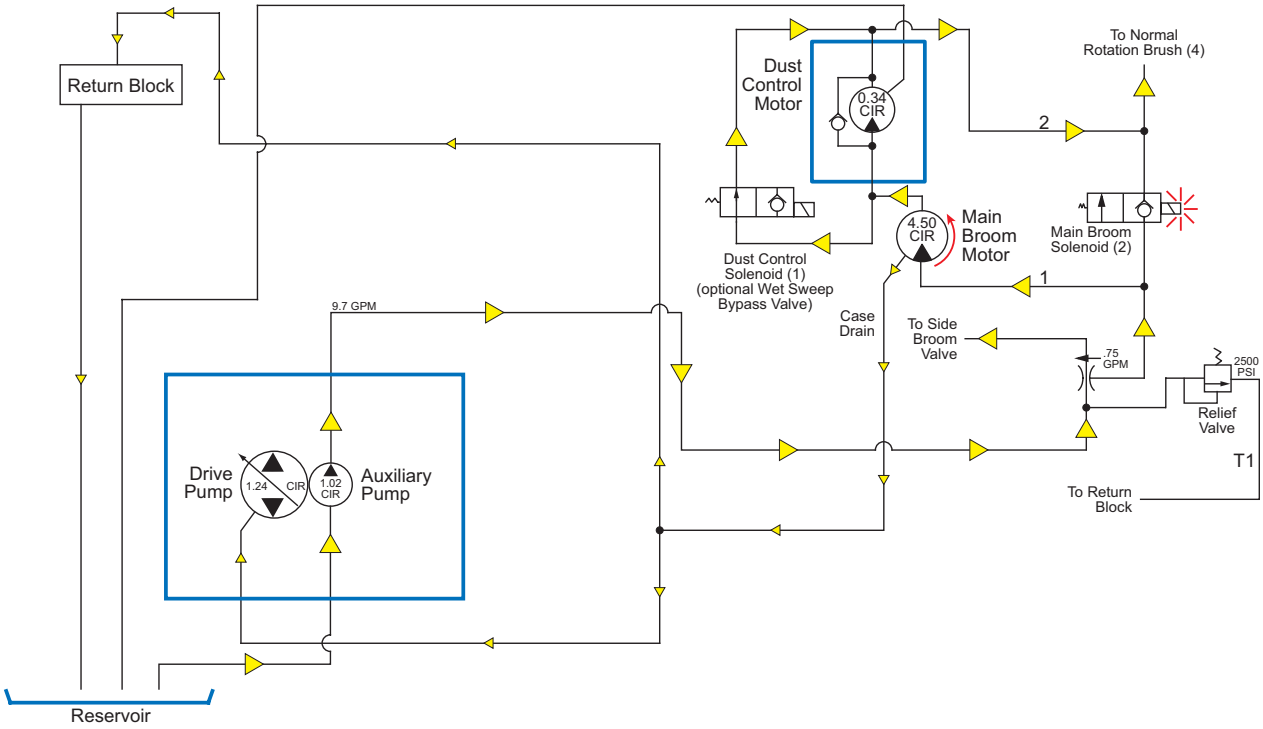

If the machine is equipped with the Wet Sweep Bypass Option, switching the Dust Control Switch to off while the Main Broom switch is on will run the **Main Broom Motor** but will switch off the **Dust Control Motor**.

In this case, the **Main Broom Solenoid (2)** is energized (blocked). This allows the hydraulic oil to flow from the **Auxiliary Pump,** through the priority flow divider, then to the **Main Broom Motor**. The **Dust Control Solenoid (1)** will be de-energized (open) to allow the oil from the discharge side of the **Main Broom Motor** to bypass the **Dust Control Motor** and flow to the **Normal Rotation Brush (4)** solenoid valve.

Component Locations

The following components are included in this section:

- Panel Filter/Filter Shaker Motor/Cover
- Filter Clamp Weldment
- Dust Control Vacuum Fan Motor/Impeller Assembly
- Main Broom Solenoid
- Dust Control Solenoid

The **Panel Filter**, **Filter Clamp Weldment** and **Filter Shaker Motor/Cover** are located behind the **Filter Access Door** on the front of the machine.

The **Filter Shaker Motor/Cover**, shaker motor plate and shaker arms are attached to the shaker motor plate, which is held to the **Filter Clamp Weldment** by the shaker pivot pin.

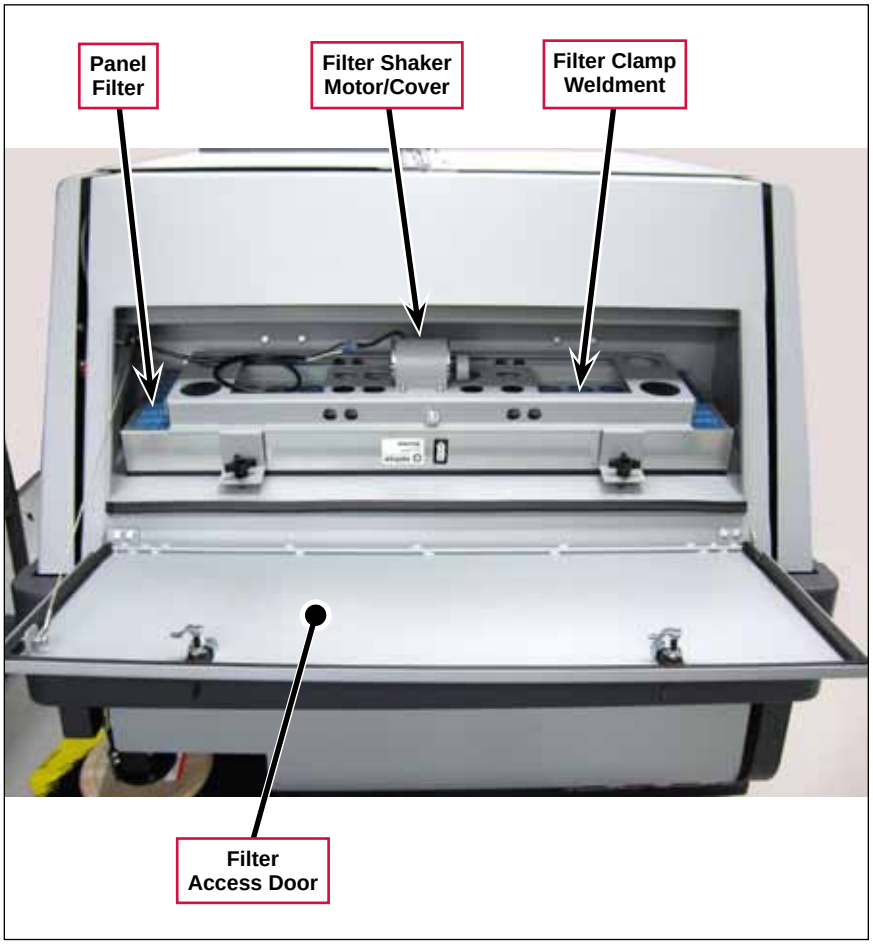

The **Dust Control Vacuum Fan Motor** is fastened to the **Impeller Mounting and Guard Bracket**. The impeller is attached to the output shaft on the **Dust Control Vacuum Fan Motor**.

The **Impeller Mounting and Guard Bracket** is mounted to the rear of the hopper.

To access the **Dust Control Vacuum Fan Motor**, tilt the recovery tank out away from the machine.

The **Case Drain Hose** is connected to the hydraulic reservoir.

The top hydraulic hose is connected to port 2 on the main control valve.

The bottom hydraulic hose is connected to a union, which is connected to the discharge port on the main broom motor.

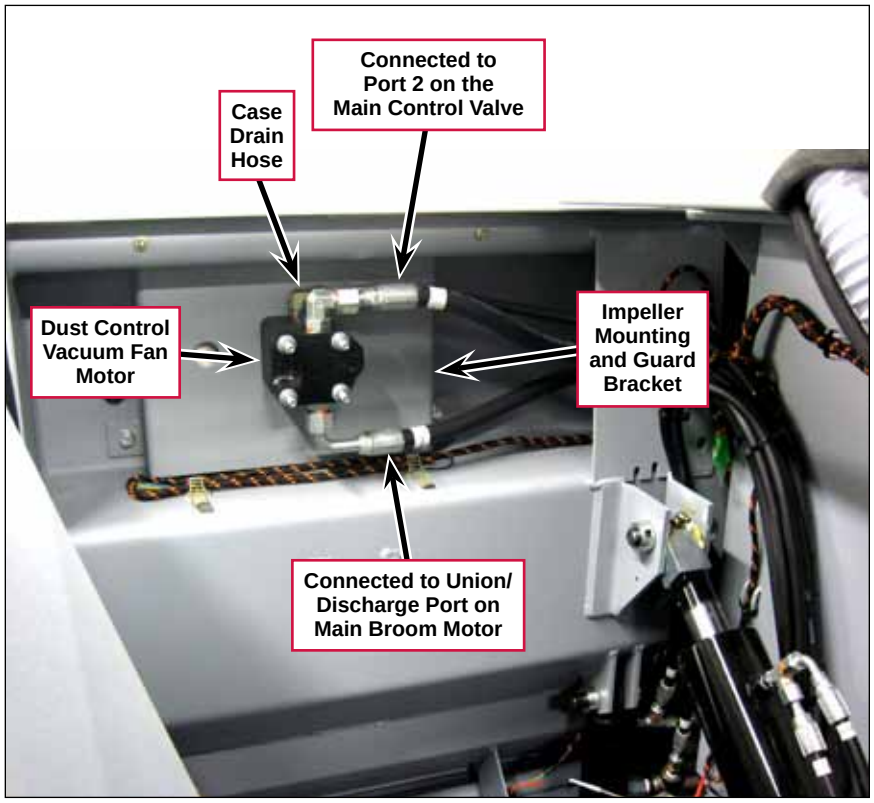

The **Main Broom Solenoid (2)** is part of the **Main Control Valve**. The **Main Control Valve** is mounted on the underside of the machine, in front of and to the left of the scrub deck.

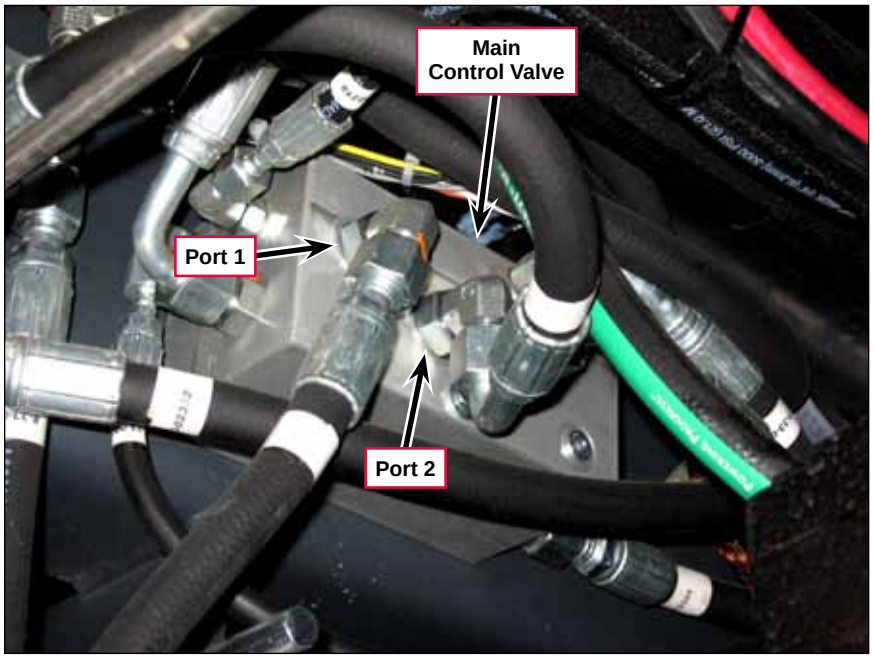

Main Control Valve
(bottom view - shown mounted in assembled machine)

When the **Main Broom Solenoid (2)** is energized it closes to direct the oil flow through **Port 1** on the **Main Control Valve**. The oil is directed through the main broom motor and dust control motor, then returns to **Port 2** on the **Main Control Valve**.

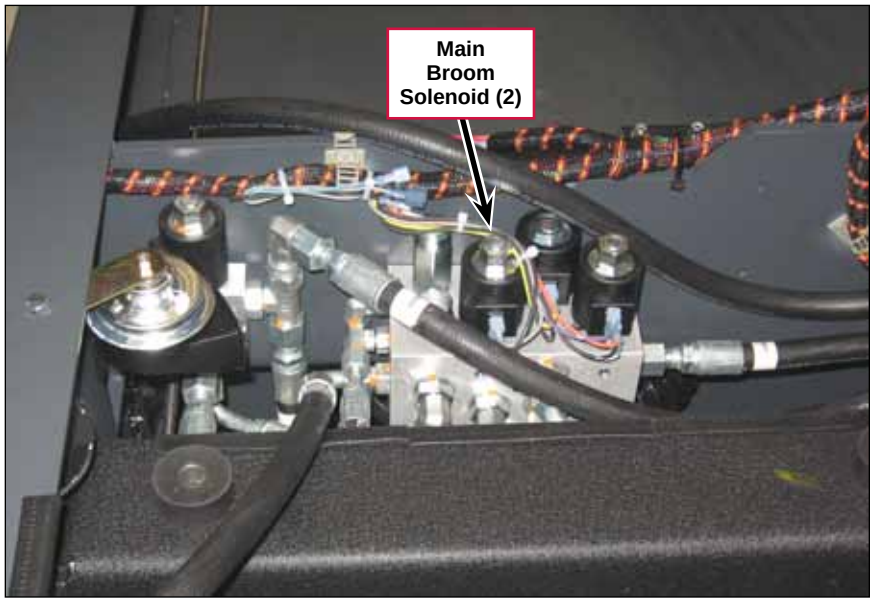

Main Control Valve
(top view - shown while machine is being assembled)

The **Dust Control Solenoid (1)** (Wet Sweep Bypass Valve) is included with the Wet Sweep Bypass Option and is mounted to the left of the **Main Control Valve**.

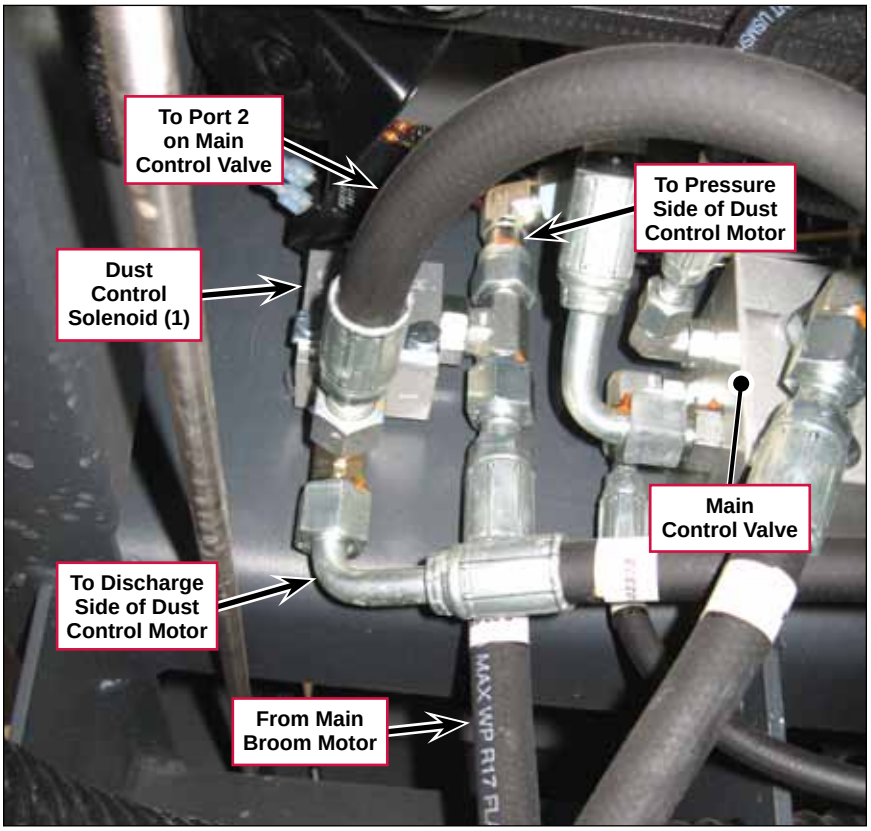

Dust Control Filter Maintenance

Warning! Wear a protective mask to prevent inhaling dust while servicing the filter. Wear eye protection while servicing the filter.

1. Lift and rotate the **Latches**, then tilt down the **Filter Access Door**.

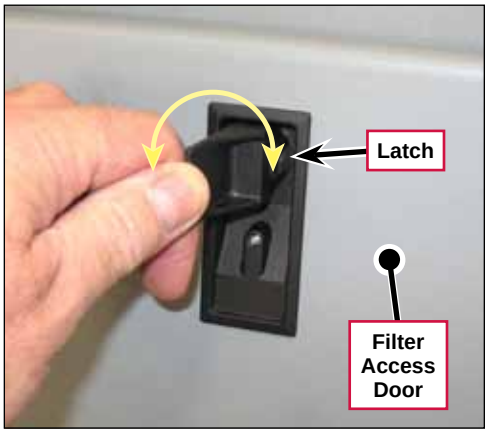

2. Disconnect the **Electrical Connectors** from the **Shaker Motor**. Note that you may need to cut the wire tie holding the wires to the filter clamp weldment to do this.

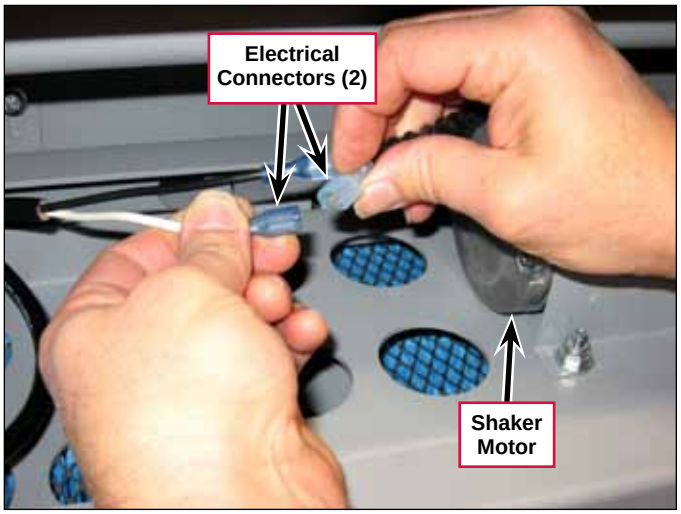

3. Loosen the two **Knobs**, then remove the **Filter Clamp Weldment** and attached shaker motor assembly, shaker motor plate and shaker arms from the machine.

4. Remove the panel filter from the machine,

5.
   - Check the dirty side of the filter for a heavy dirt buildup. If the filter is lightly coated (1/16-inch thick) with dirt and the pleats in the filter are not filled with dirt, cleaning is not necessary.
   - If there is a heavy coating of dirt on the filter, clean the filter by following one of the three methods listed below:

Caution! Be careful not to puncture the filter while cleaning.

Method "A"

a. Vacuum any loose dust from the filter.

b. Gently tap the filter against a flat surface (with the dirty side down) to remove loose dust and dirt.

Method "B"

a. Vacuum any loose dust from the filter.

b. Blow compressed air (maximum pressure 100 psi) into the clean side of the filter (in the opposite direction of the airflow).

Method "C"

a. Vacuum any loose dust from the filter.

b. Soak the filter in warm water for 15 minutes, then rinse it under a gentle stream of water (maximum pressure 40 psi).

c. Let the filter dry *completely* before putting it back into the machine.

6. Inspect the gasket around the **Panel Filter**. If the gasket is torn or damaged, replace the **Panel Filter**.

7. Reinstall the **Panel Filter** into the machine. Make sure the **AIRFLOW** arrow is pointing up.

8. Reinstall the filter clamp weldment and attached shaker motor assembly, shaker motor plate and shaker arms into the machine. Note that the two vertical tabs on the filter clamp weldment must fit into the matching slots in the rear clamps mounted on the rear of the filter enclosure.

9. Reinstall and tighten the two knobs.

10. Reconnect the electrical connectors to the shaker motor. Tie the wires to the filter clamp weldment as necessary.

11. Close the filter access door and secure the two latches.

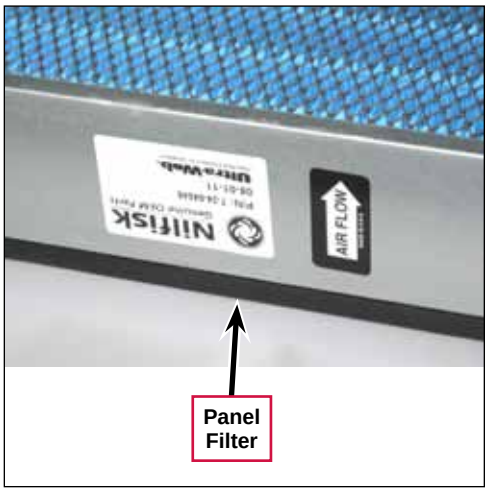

Troubleshooting

Problem	Cause	Correction
Dust not being removed effectively from the air.	Vacuum leak(s) due to: • Damaged panel filter or panel filter gasket. • Damaged hopper access door gasket.	• Check the panel filter and gasket and replace as necessary. • Check the hopper access door gasket and replace as necessary.
Dust Control Motor not running.	The Dust Control Switch is set to off (Wet Sweep Bypass Option only).	Switch on the Dust Control Switch.
	Circuit breaker CB6 is tripped.	Reset the circuit breaker.
	No voltage to the Main Broom Solenoid valve.	• Check for continuity through the hopper and hopper door “whisker” switches when the hopper is down and the hopper door is closed. Repair the wiring or replace the switch(es) as necessary. • Check the Main Broom Switch function and repair/ replace as necessary. • Check the wiring from the Main Broom Switch to the Main Broom Solenoid valve. There should be 0 volts to the solenoid when the main broom and dust control motors are off, and 12 VDC to the solenoid when the motors are on.
	Main Broom Solenoid valve not operating correctly.	Check the solenoid coil resistance. If not 7.2 ohms ±10%, replace the coil. Also see the ***Dust Control System Wiring Diagram***.
The Shaker Motor will not run.	Circuit breaker CB6 is tripped.	Reset the circuit breaker.
	No voltage to the Shaker Motor Relay R1.	• Check for continuity through the hopper and hopper door “whisker” switches when the hopper is down and the hopper door is closed. Repair the wiring or replace the switch(es) as necessary. • Check the Shaker Motor Relay R1 contacts and coil resistance. If the coil resistance is not 80-90 ohms, replace the relay. • If there is voltage to the Shaker Motor, replace the Shaker Motor.
Dust control motor runs even though the Dust Control Switch is off (Wet Sweep Bypass Option only).	No voltage to the Dust Control Solenoid (Wet Sweep Bypass) valve.	• Check the Dust Control Switch function and repair/ replace as necessary. • Check the wiring from the Dust Control Switch to the Dust Control Solenoid (Wet Sweep Bypass) valve. There should be 0 volts to the solenoid when the dust control motor is off and 12 VDC to the solenoid when the motor is on.
	Dust Control Solenoid (Wet Sweep Bypass) valve not operating correctly.	Check the solenoid coil resistance. If not 7.2 ohms ±10%, replace the coil. Also see the ***Dust Control System Wiring Diagram***.

Specifications

Component	Specifications
Dust Control Vacuum Fan Motor	Displacement – 0.00149 gal/rev; 0.3442 CIR
Main Broom Solenoid (2) Valve **Dust Control Solenoid (1) Valve**	Voltage – 12 volts
	Nominal Coil Resistance – 7.2 Ohms
	Initial current draw – 1.67 amps
Shaker Motor	Voltage – 12 volts
Shaker Relay R1	Coil Resistance – 85 ± 5 Ohms

Electrical System

Functional Description

Overview

The electrical system consists of the switches, gauges and relays on the instrument panel, the circuit breakers, the drive pedal proximity sensors and the battery. Note that the hydraulic solenoid valves and engine electrical components are described in the corresponding sections of this manual.

Instrument Panel and Circuit Breakers

The instrument panel houses the gauges, lights, switches and relays that monitor and control the various machine systems. The 10 15-amp **Circuit Breakers** are mounted to the right of the instrument panel.

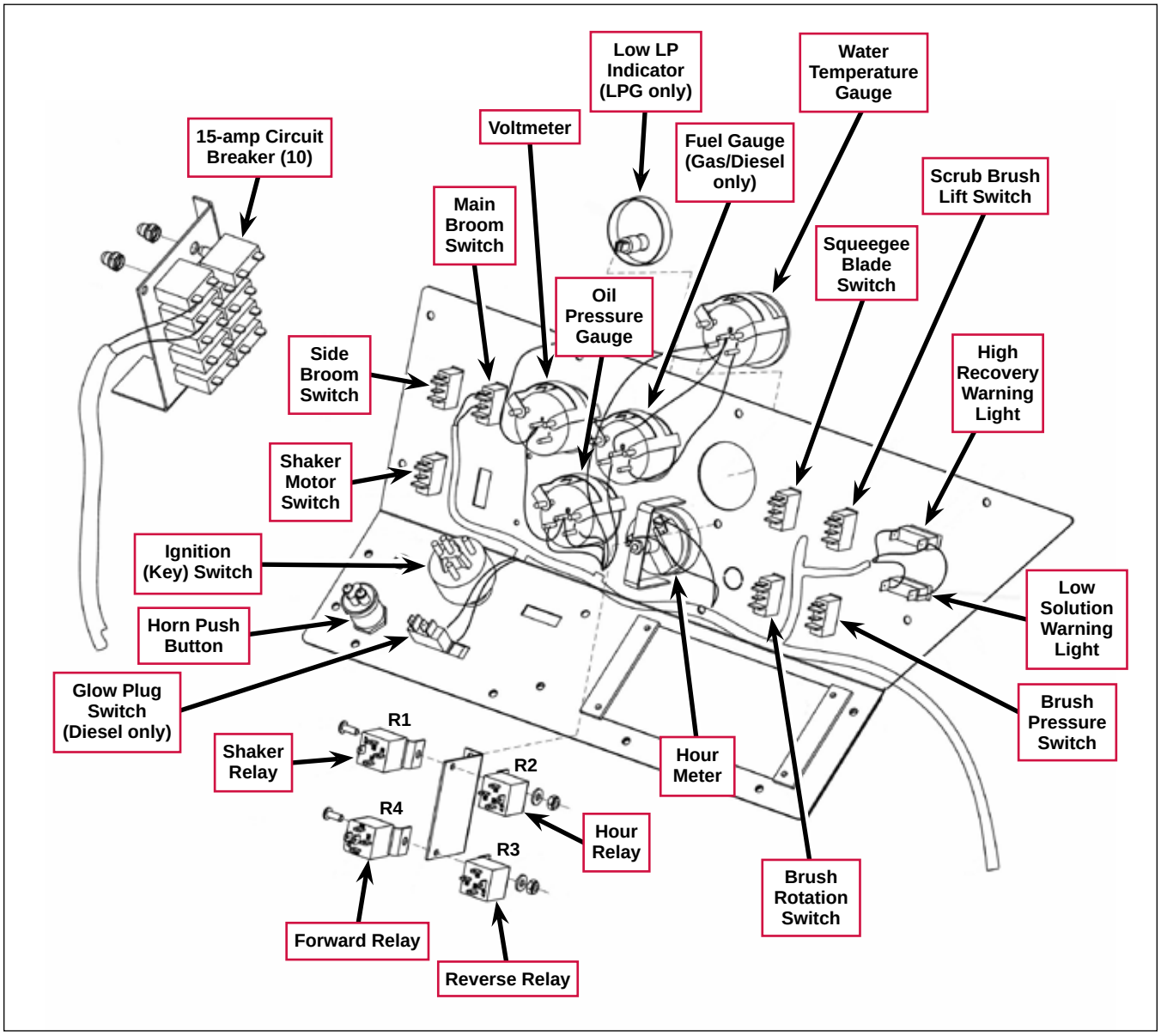

Foot Pedal Proximity Switches

The **Foot Pedal Proximity Switches** are proximity sensors that actuate the forward and reverse relays (R4 and R3 respectively). The forward and reverse relays enable and disable the various machine functions that are related to the direction in which the machine is traveling.

- When the **Foot Pedal** is moved to the forward-drive position, it actuates the rear **Foot Pedal Proximity Switch** which actuates the Forward Relay R4.
- When the **Foot Pedal** is moved to the reverse-drive position, it actuates the front **Foot Pedal Proximity Switch** which actuates the Reverse Relay R3.

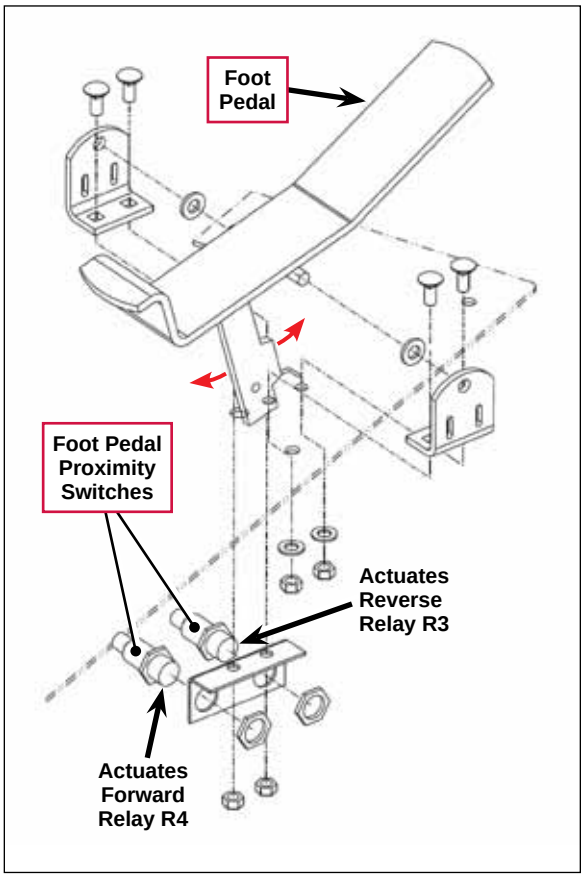

Note: *The **Foot Pedal Proximity Switch** that actuates the forward relay is referred to as the Drive Pedal Forward Sensor on the electrical ladder diagram.*

*The **Foot Pedal Proximity Switch** that actuates the reverse relay is referred to as the Drive Pedal Reverse Sensor on the electrical ladder diagram.*

Note: *The drawing shown here is for the GM engines. The configuration for the Mitsubishi diesels varies slightly.*

Note: *The **Foot Pedal Proximity Switches** will light when actuated (closed).*

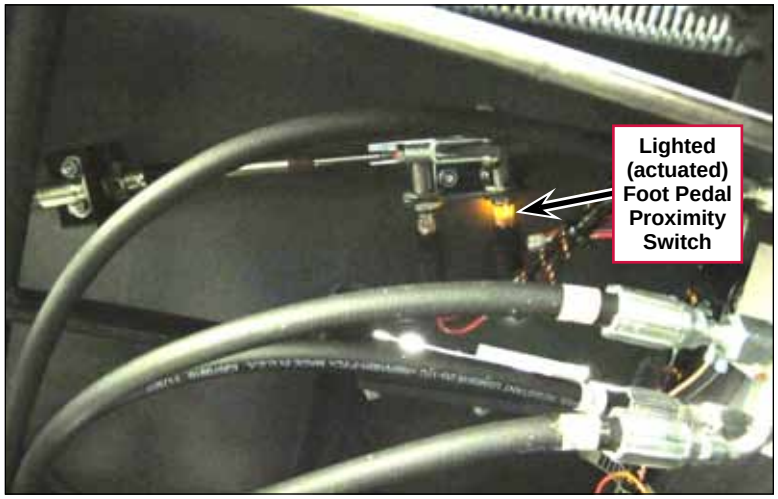

Electrical Ladder Diagrams

Note: *Later models introduced an additional relay "R6 Power Relay" around April 2017. The Rev B diagram is for models without the R6 relay. The Rev C diagram is for models with the R6 relay.*

Electrical Ladder Diagram, p/n 56382653, Rev. B, Page 1

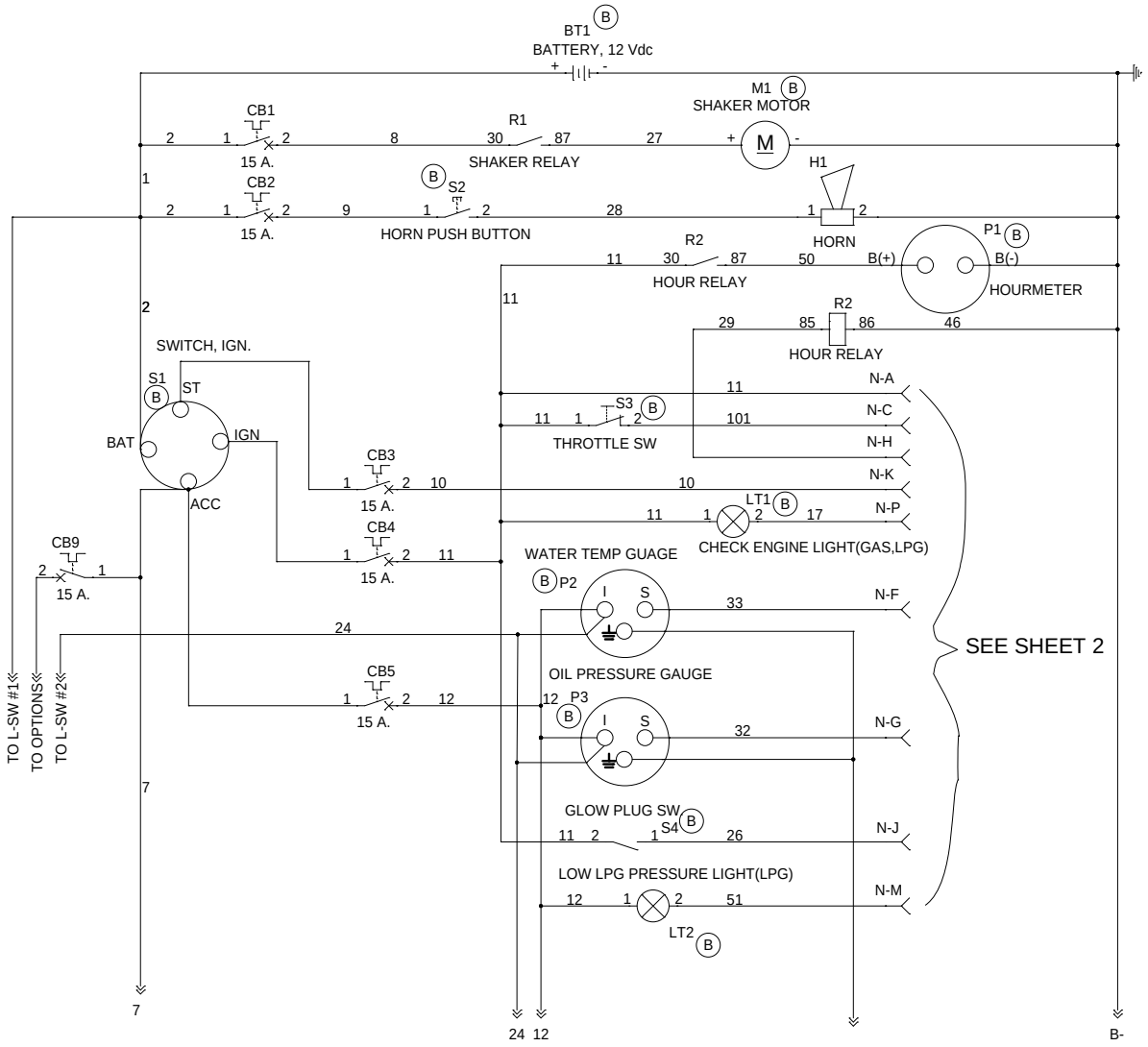

Electrical Ladder Diagram, p/n 56382653, Rev. B, Page 2

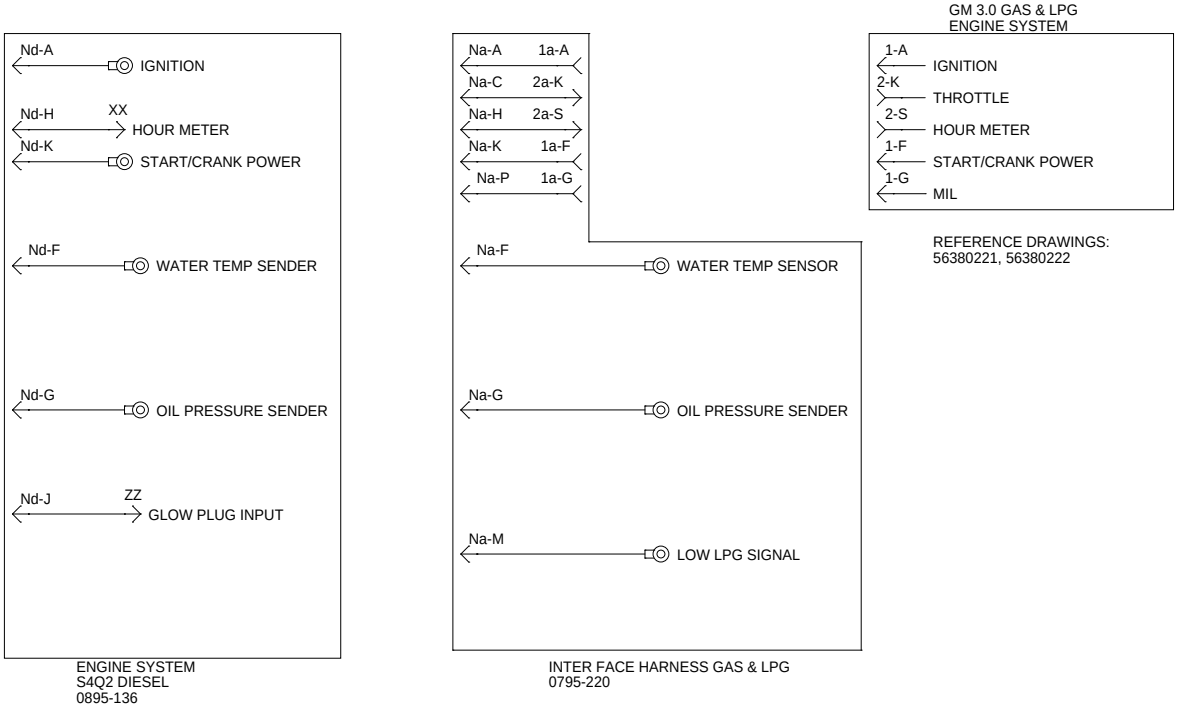

Electrical Ladder Diagram, p/n 56382653, Rev. B, Page 3

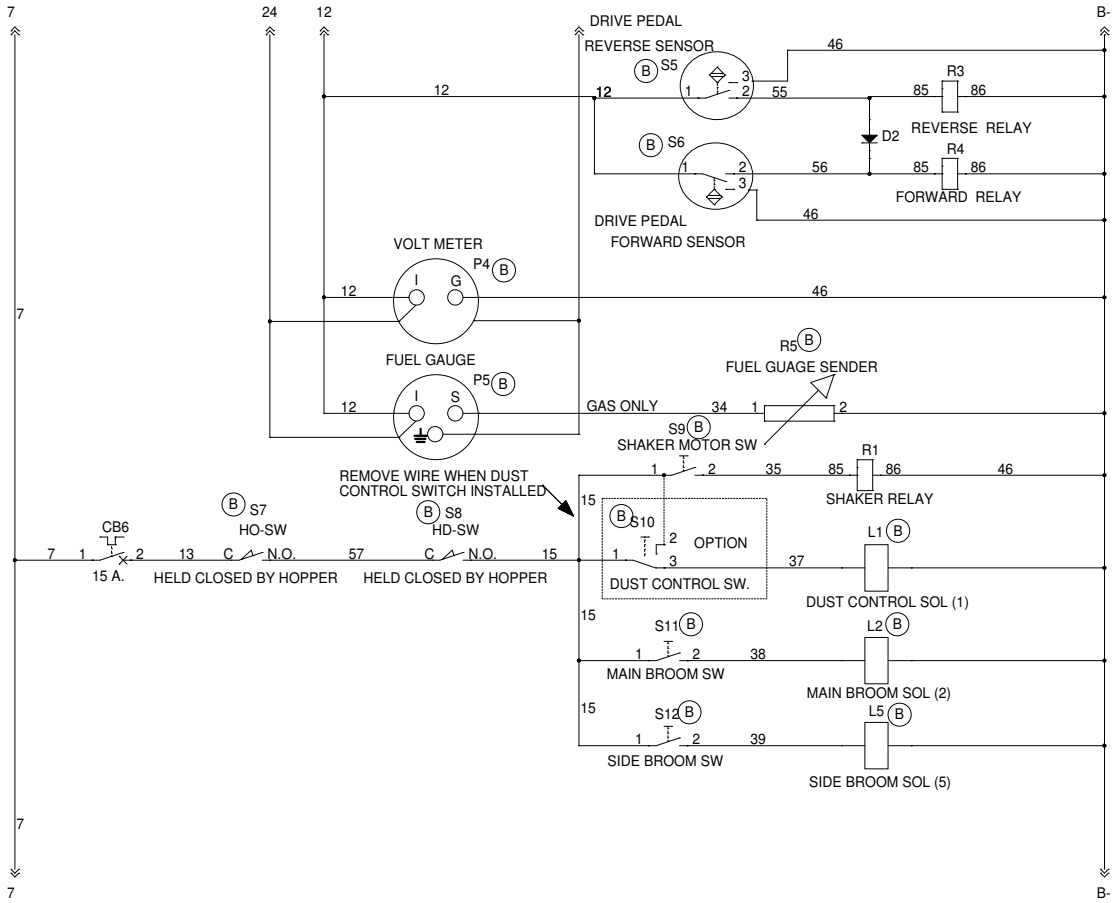

Electrical Ladder Diagram, p/n 56382653, Rev. B, Page 4

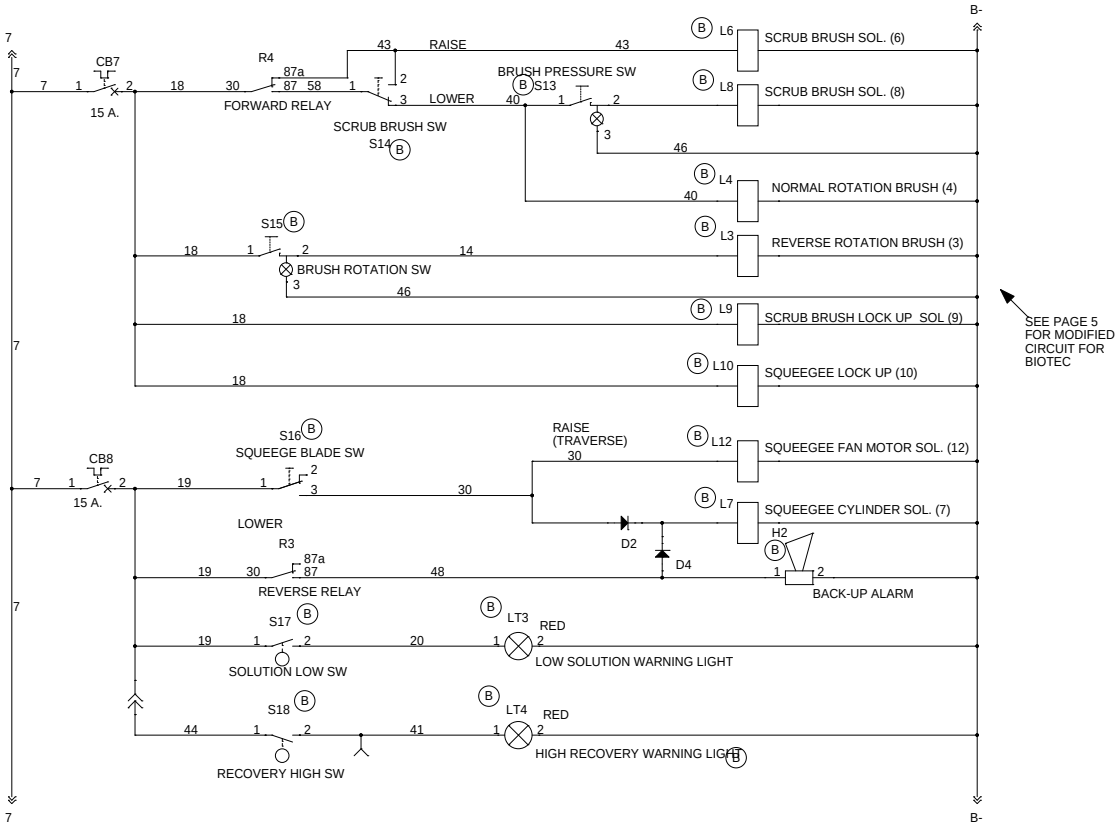

Electrical Ladder Diagram, p/n 56382653, Rev. B, Page 5

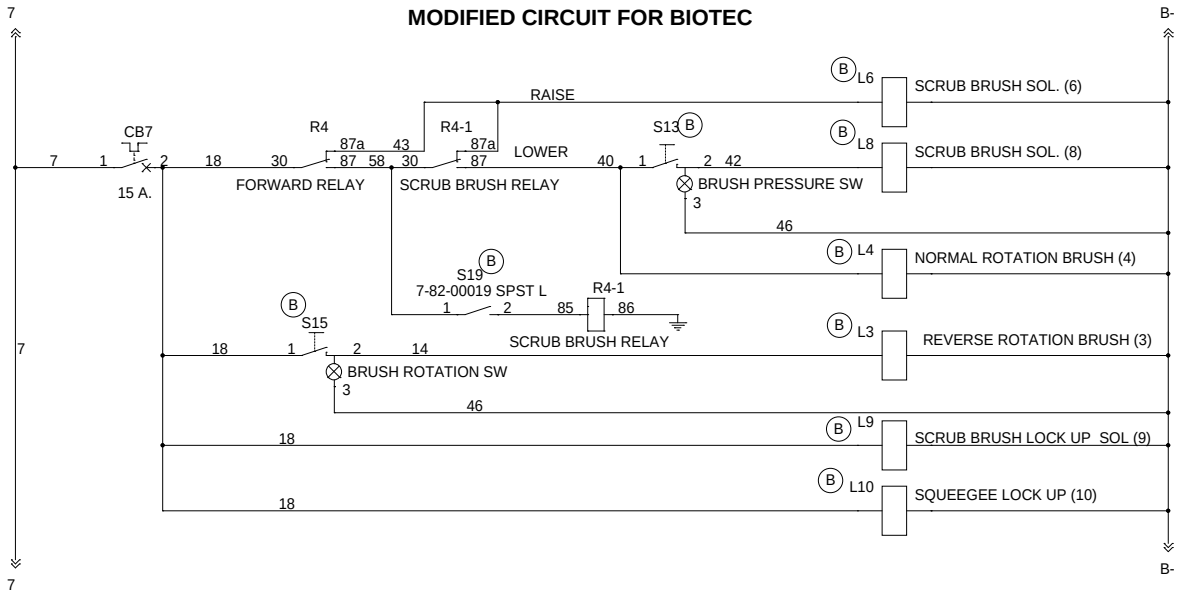

Electrical Ladder Diagram, p/n 56382653, Rev. B, Page 6

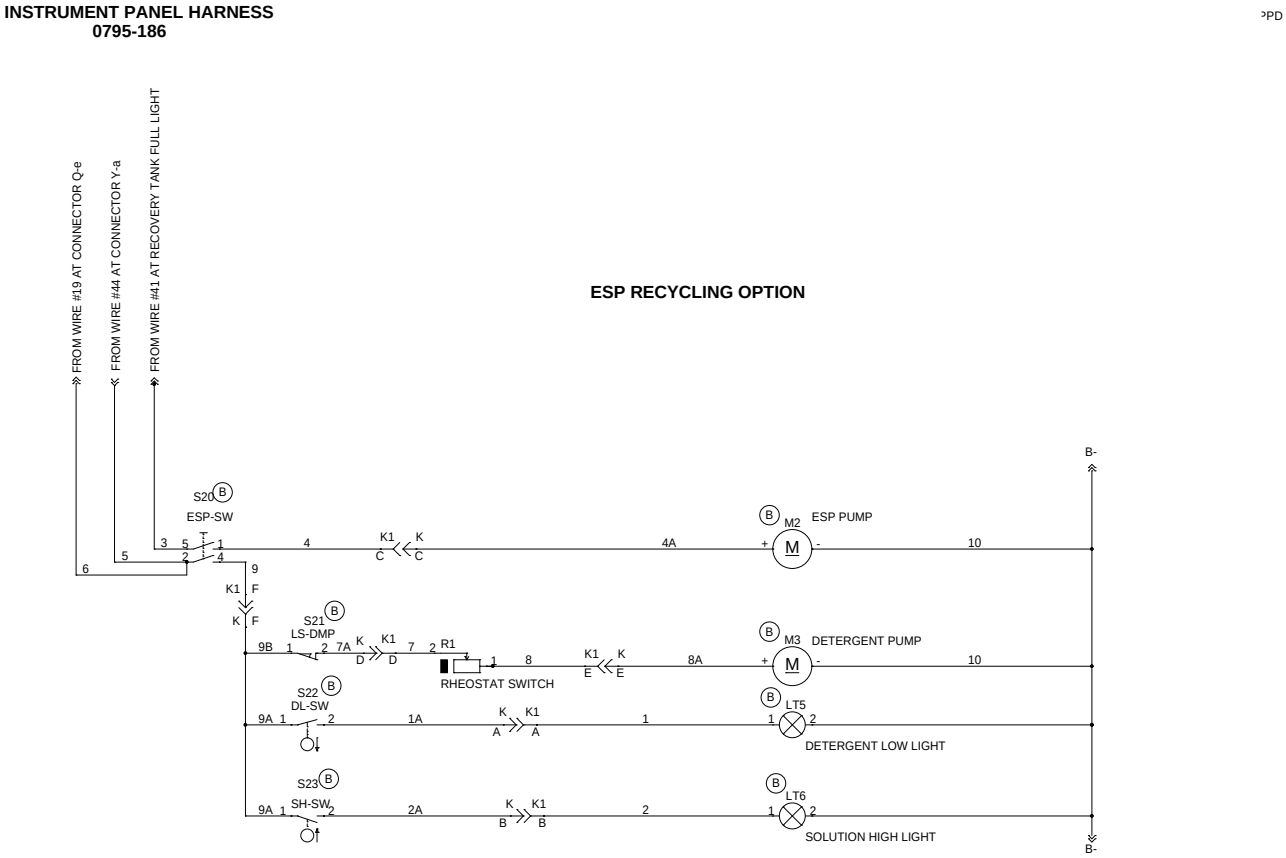

Electrical Ladder Diagram, p/n 56382653, Rev. C, Page 1

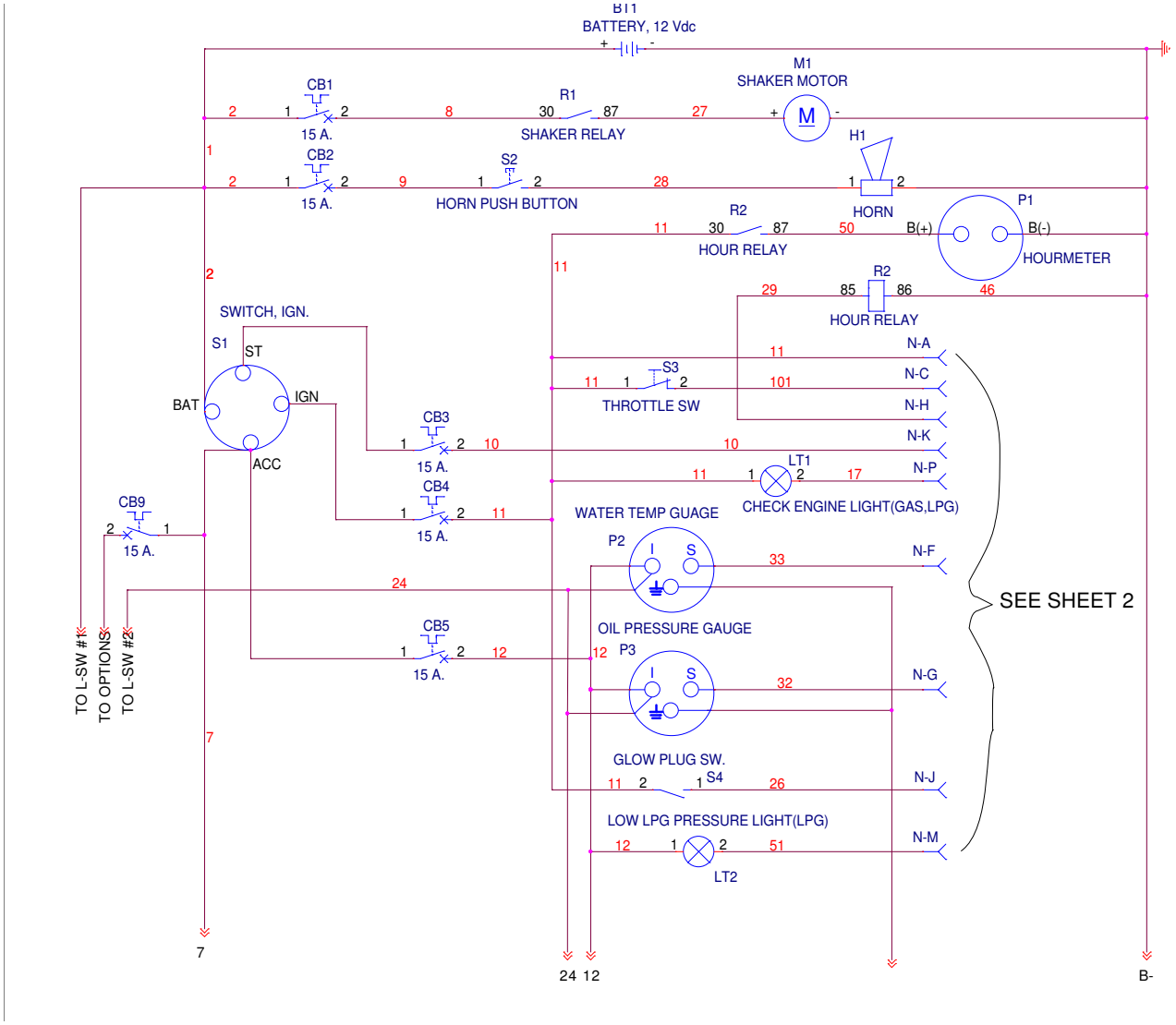

Electrical Ladder Diagram, p/n 56382653, Rev. C, Page 2

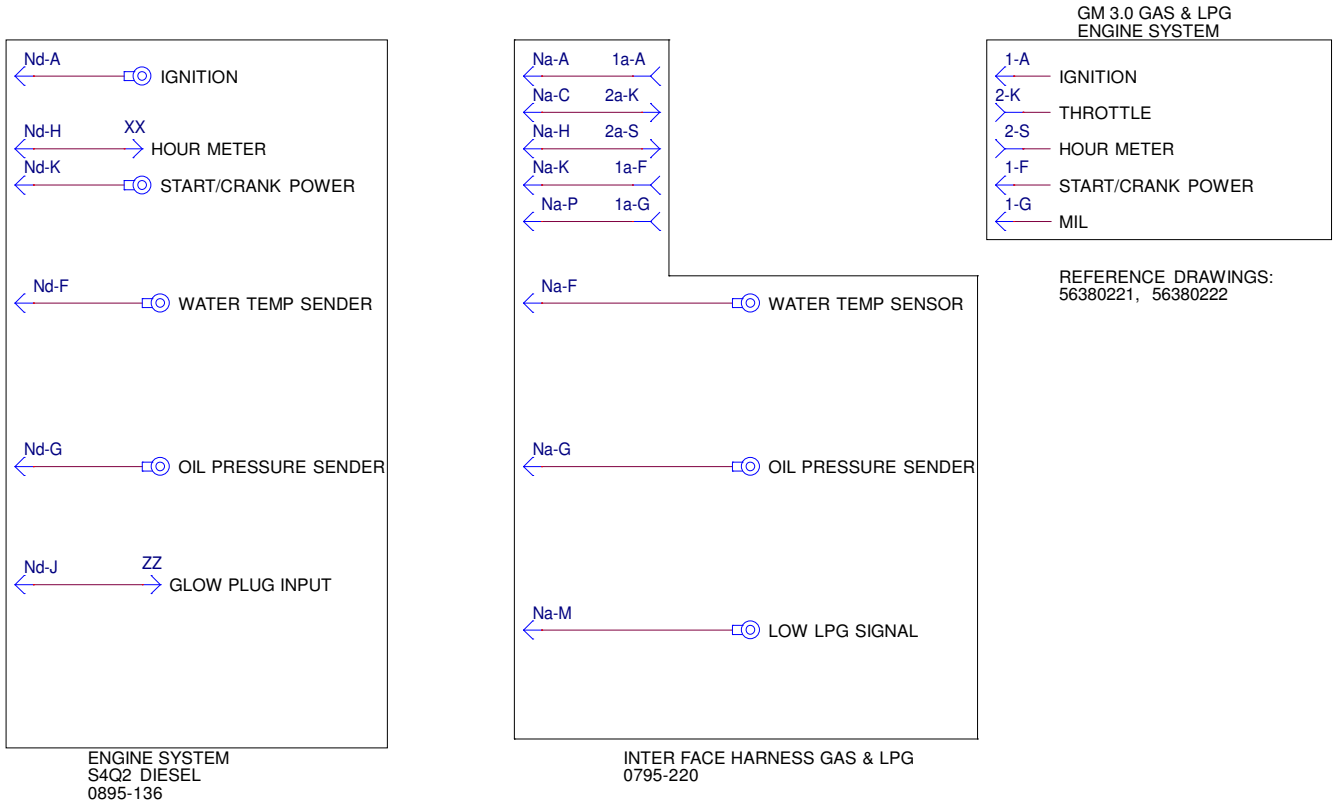

Electrical Ladder Diagram, p/n 56382653, Rev. C, Page 3

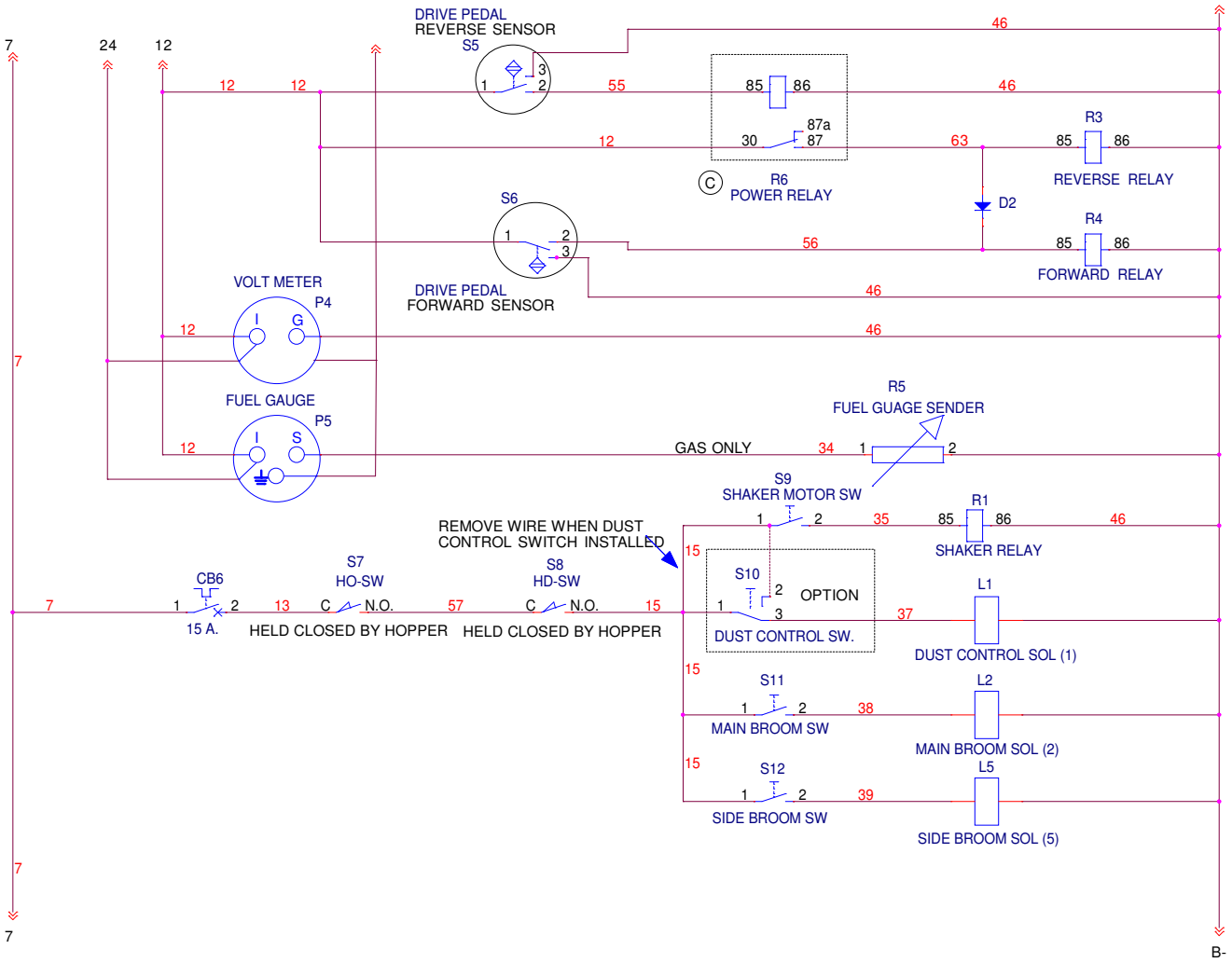

Electrical Ladder Diagram, p/n 56382653, Rev. C, Page 4

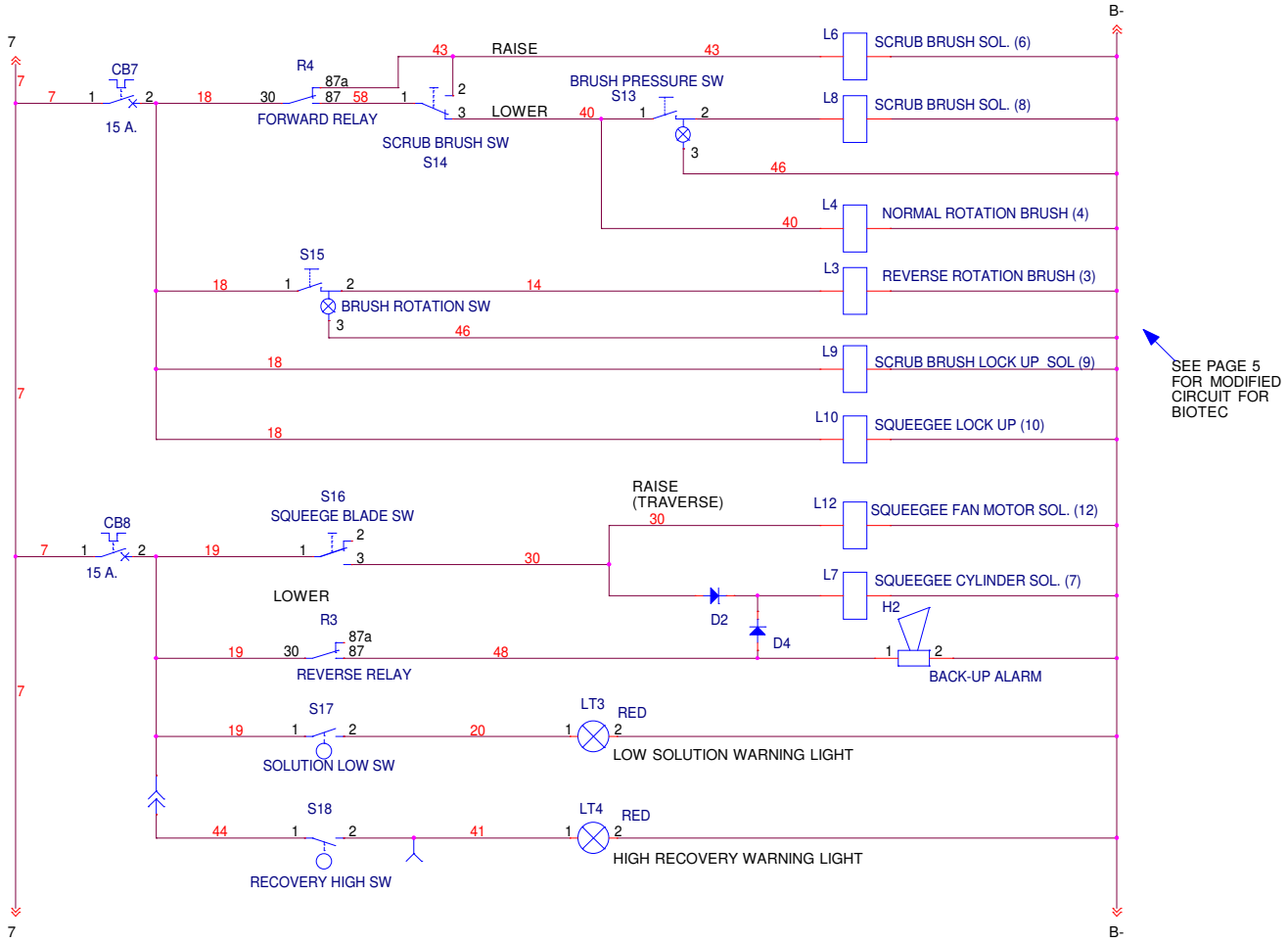

Electrical Ladder Diagram, p/n 56382653, Rev. C, Page 5

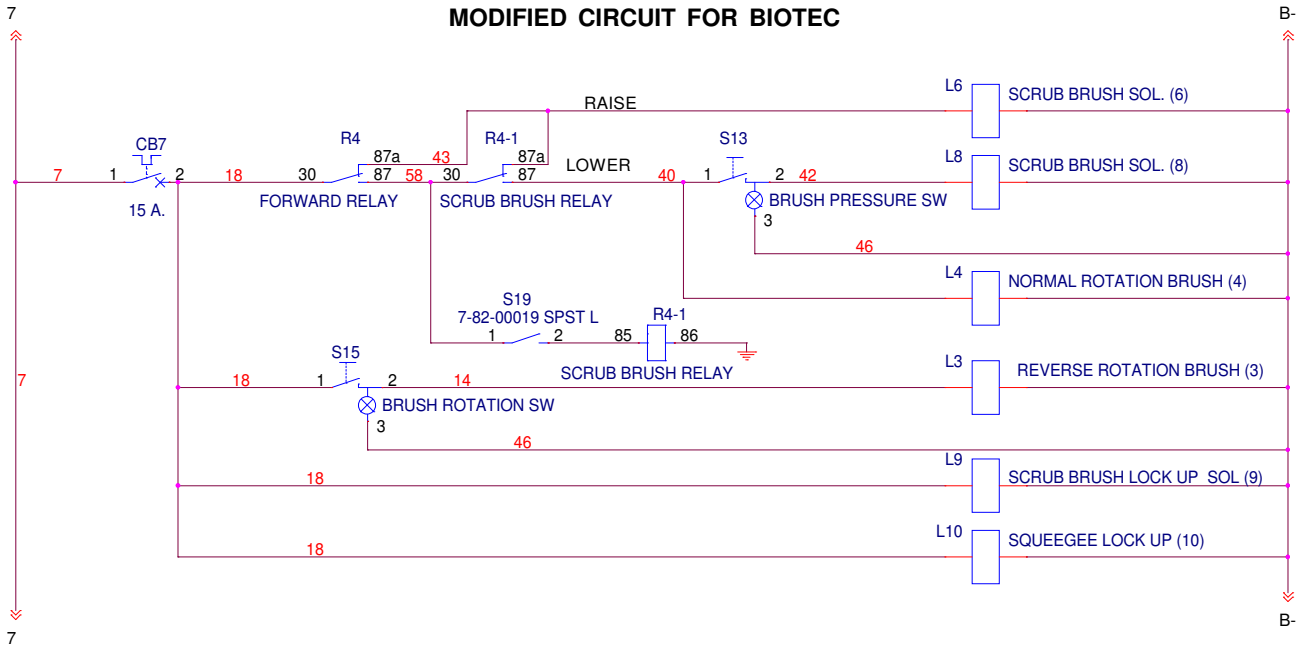

Electrical Ladder Diagram, p/n 56382653, Rev. C, Page 6

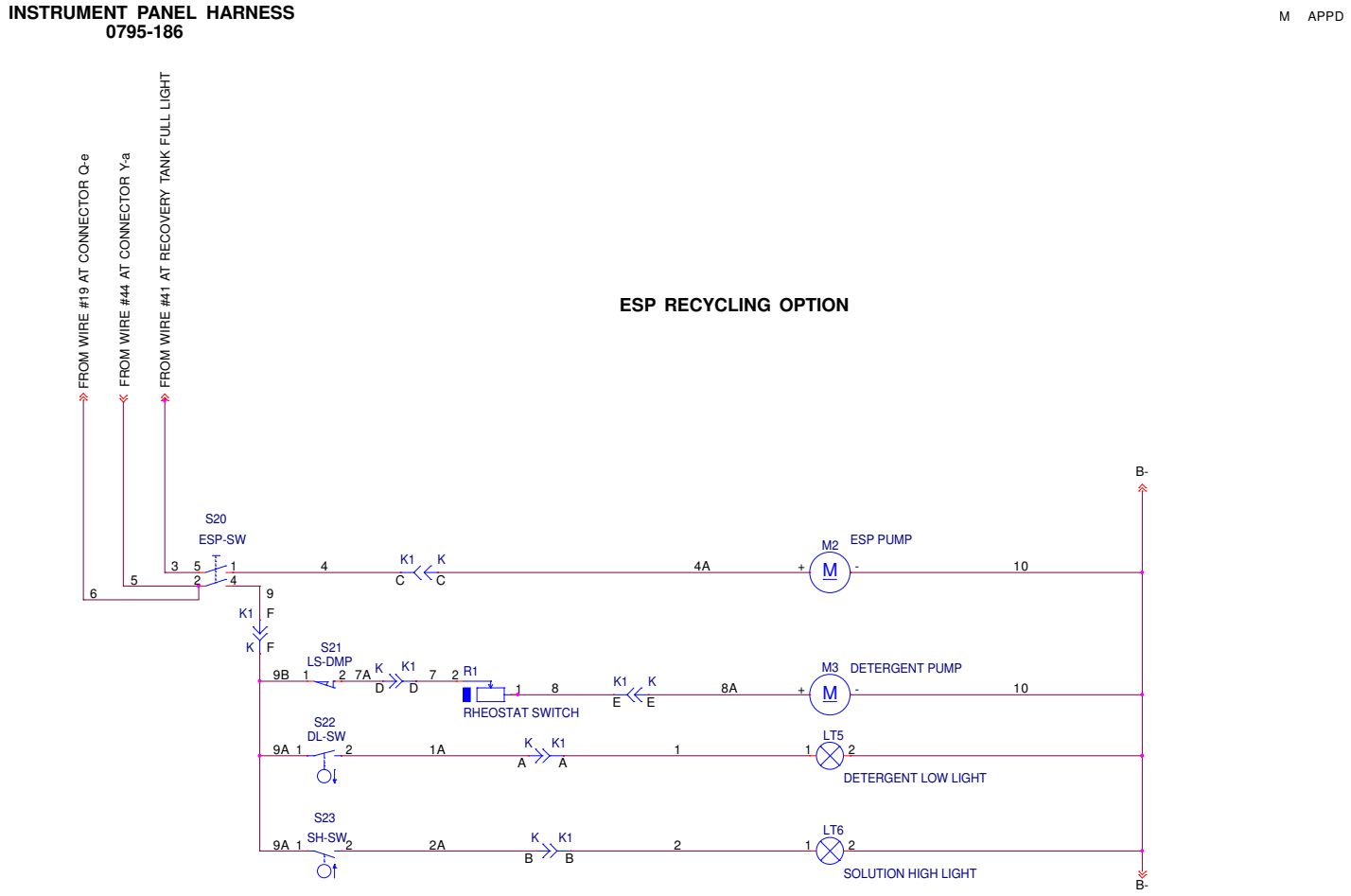

Engine Harness - GM 3.0L Gas, p/n 56380222

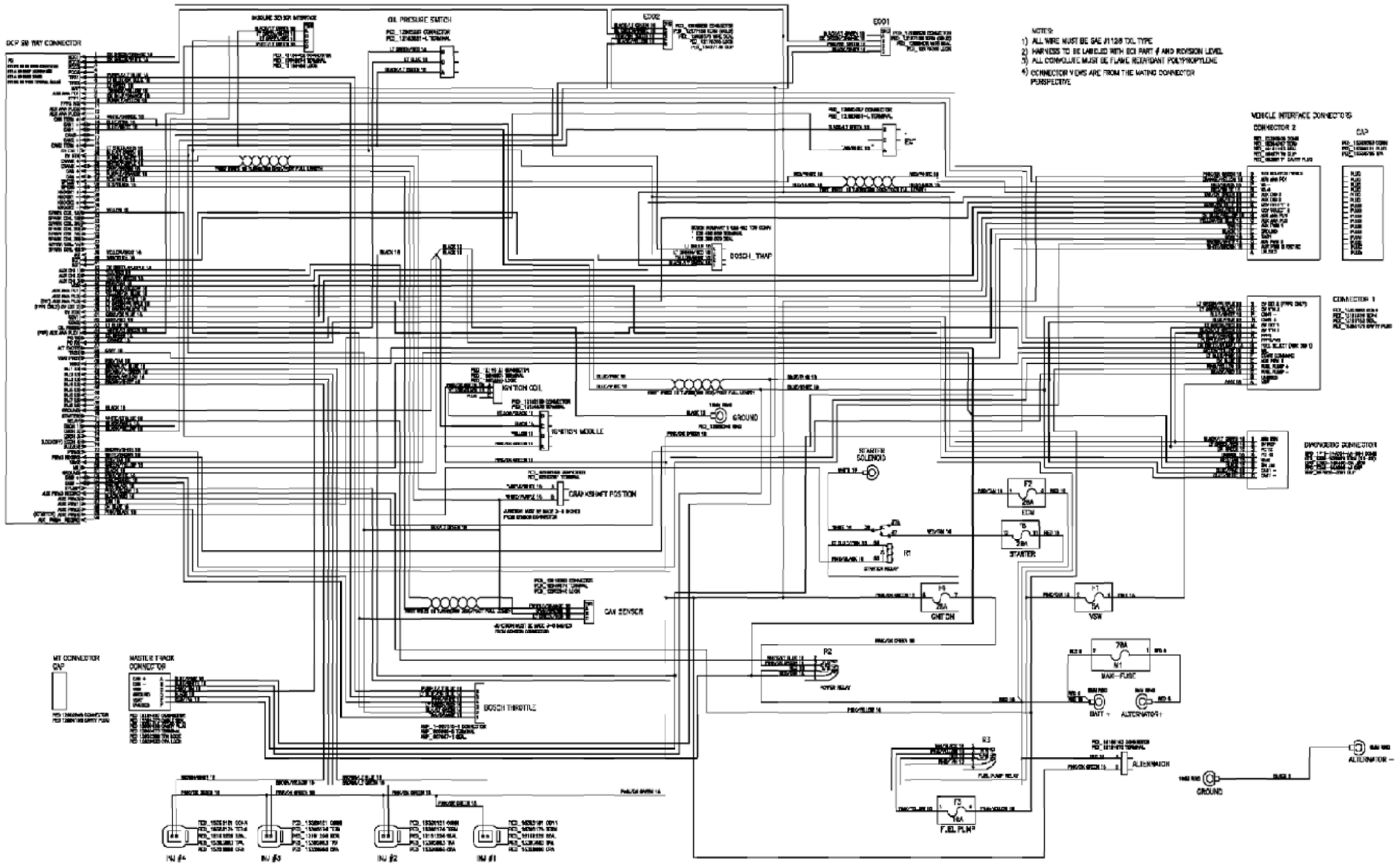

Engine Harness -GM 3.0L LPG, p/n 56380221

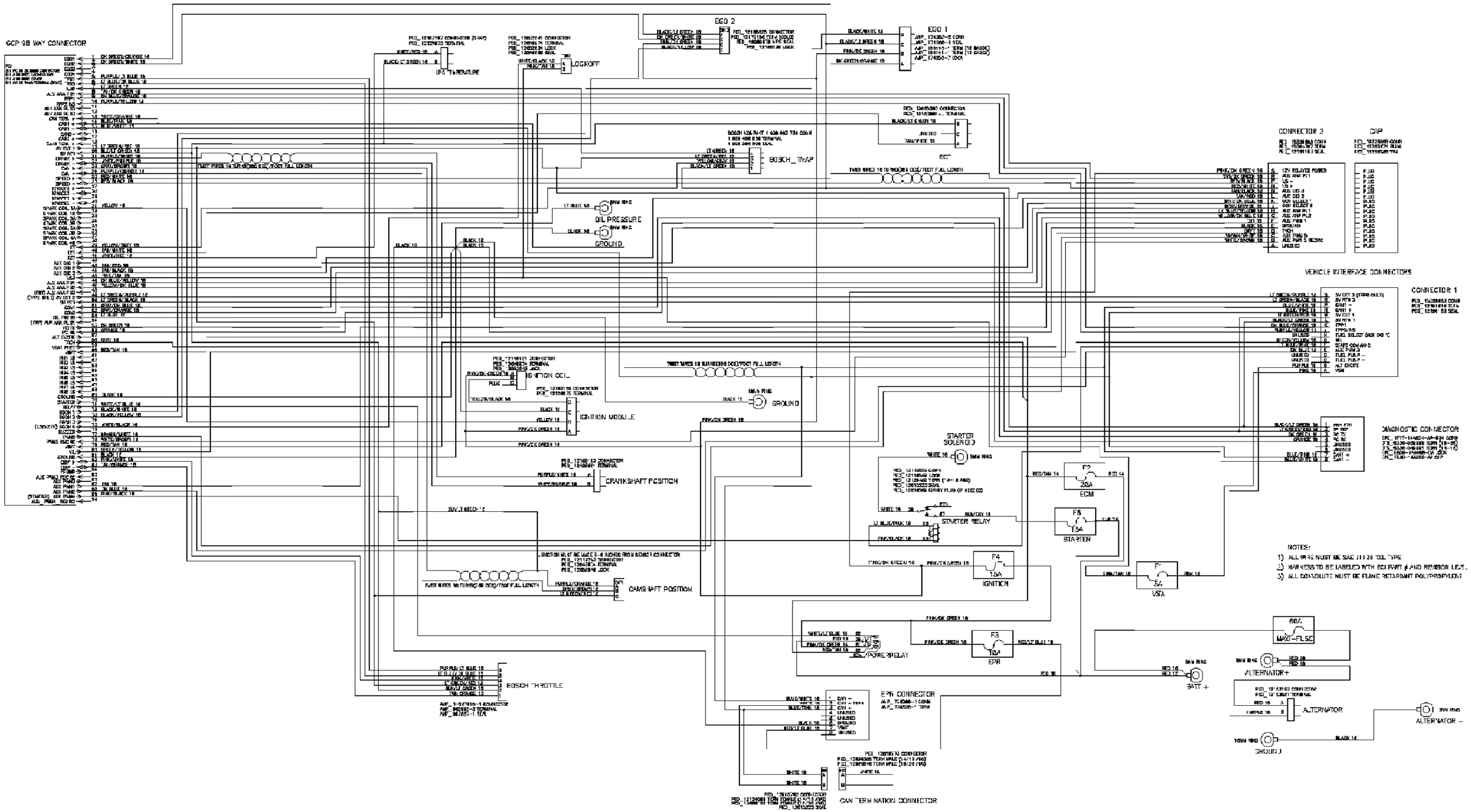

Machine Harness Routing Diagram – Gas, LP and Diesel

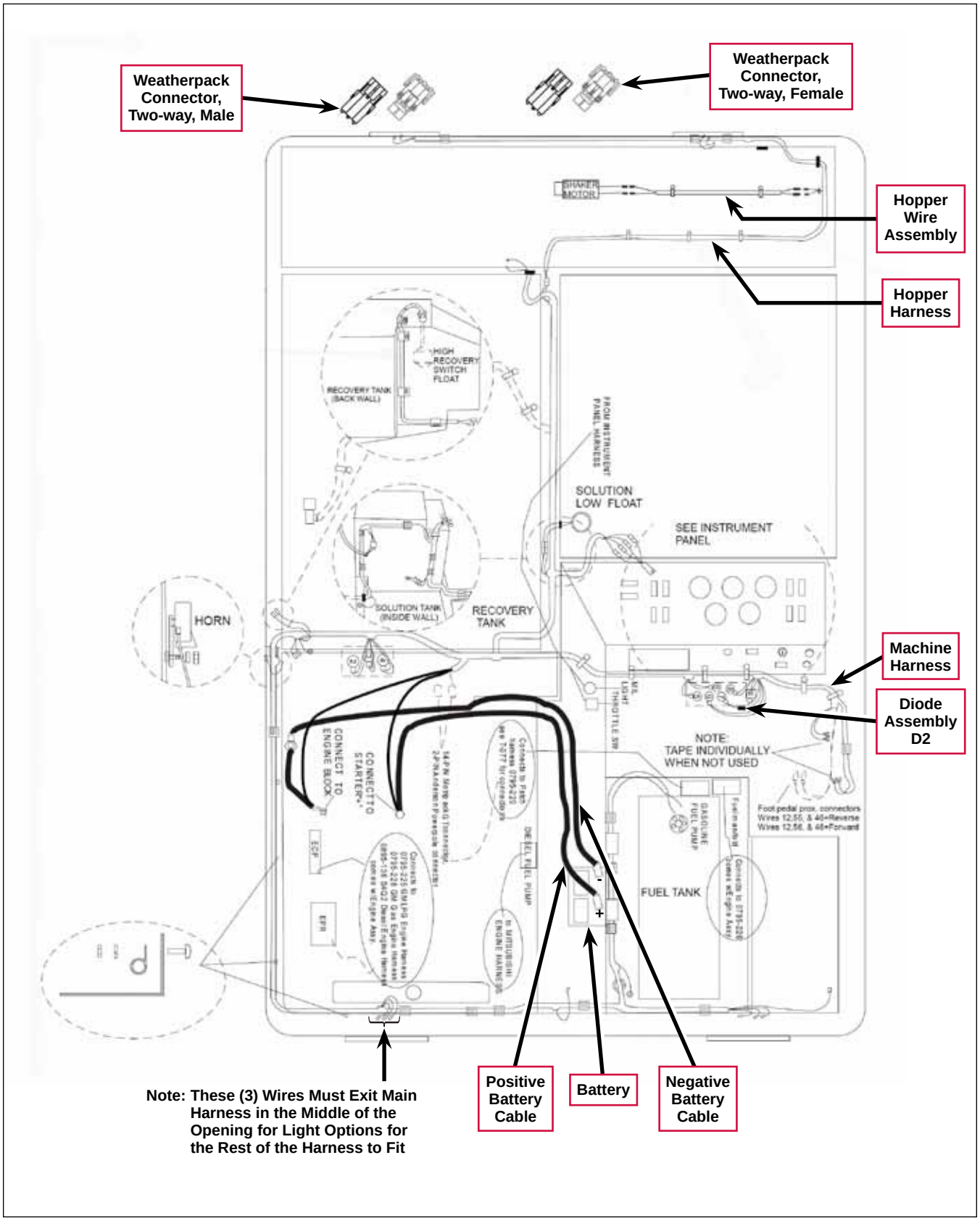

Engine System (common)

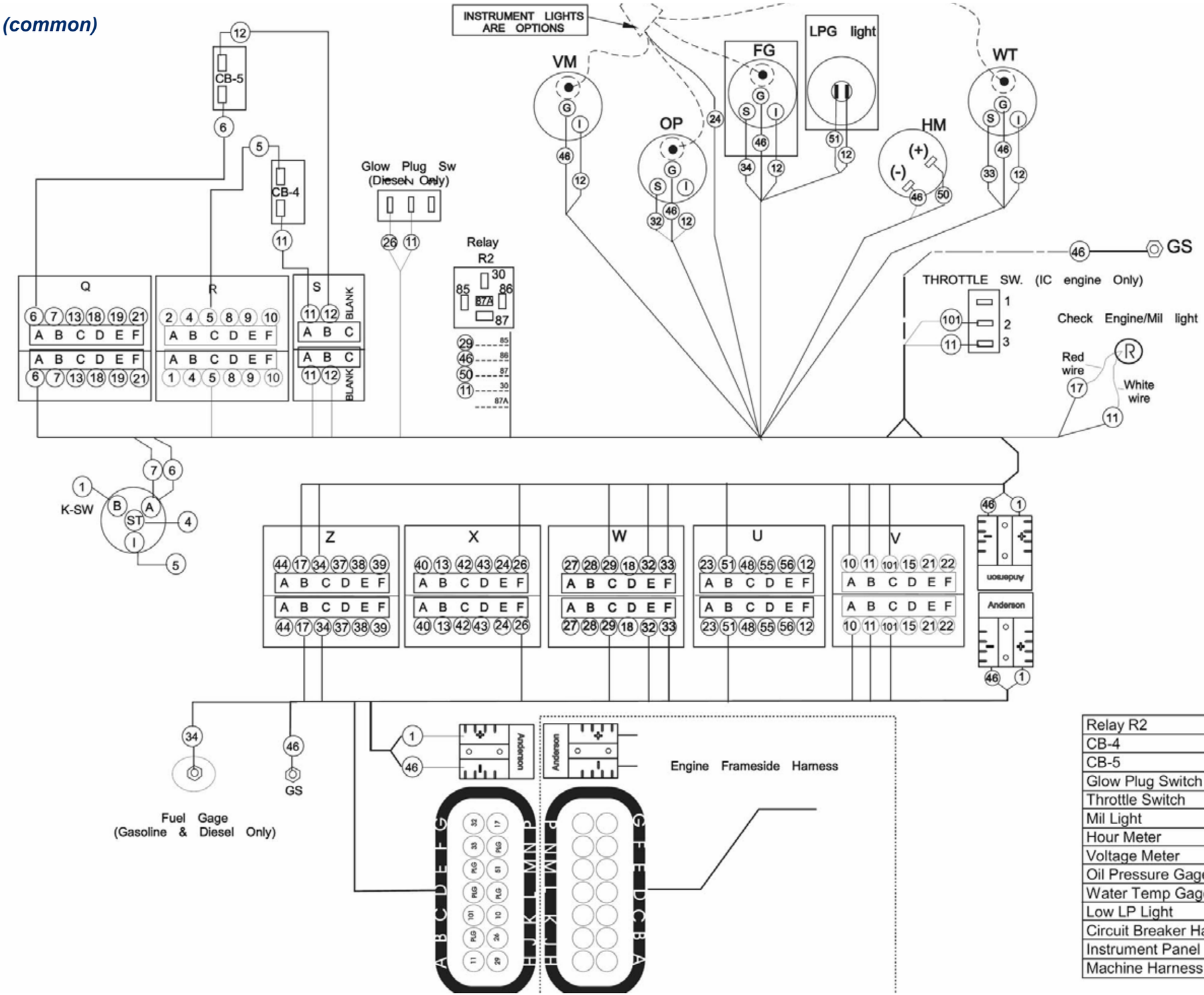

Relay R2	8-64-00012
CB-4	8-64-00008
CB-5	8-64-00008
Glow Plug Switch	8-82-00045
Throttle Switch	2-00-05827
Mil Light	7-11-04065
Hour Meter	8-48-05023
Voltage Meter	8-48-00016
Oil Pressure Gage	8-48-05027
Water Temp Gage	8-48-05028
Low LP Light	7-11-04035
Circuit Breaker Harness	0795-111
Instrument Panel Harness	0795-186
Machine Harness	0795-185

Engine Frame Side System – Mitsubishi Diesel

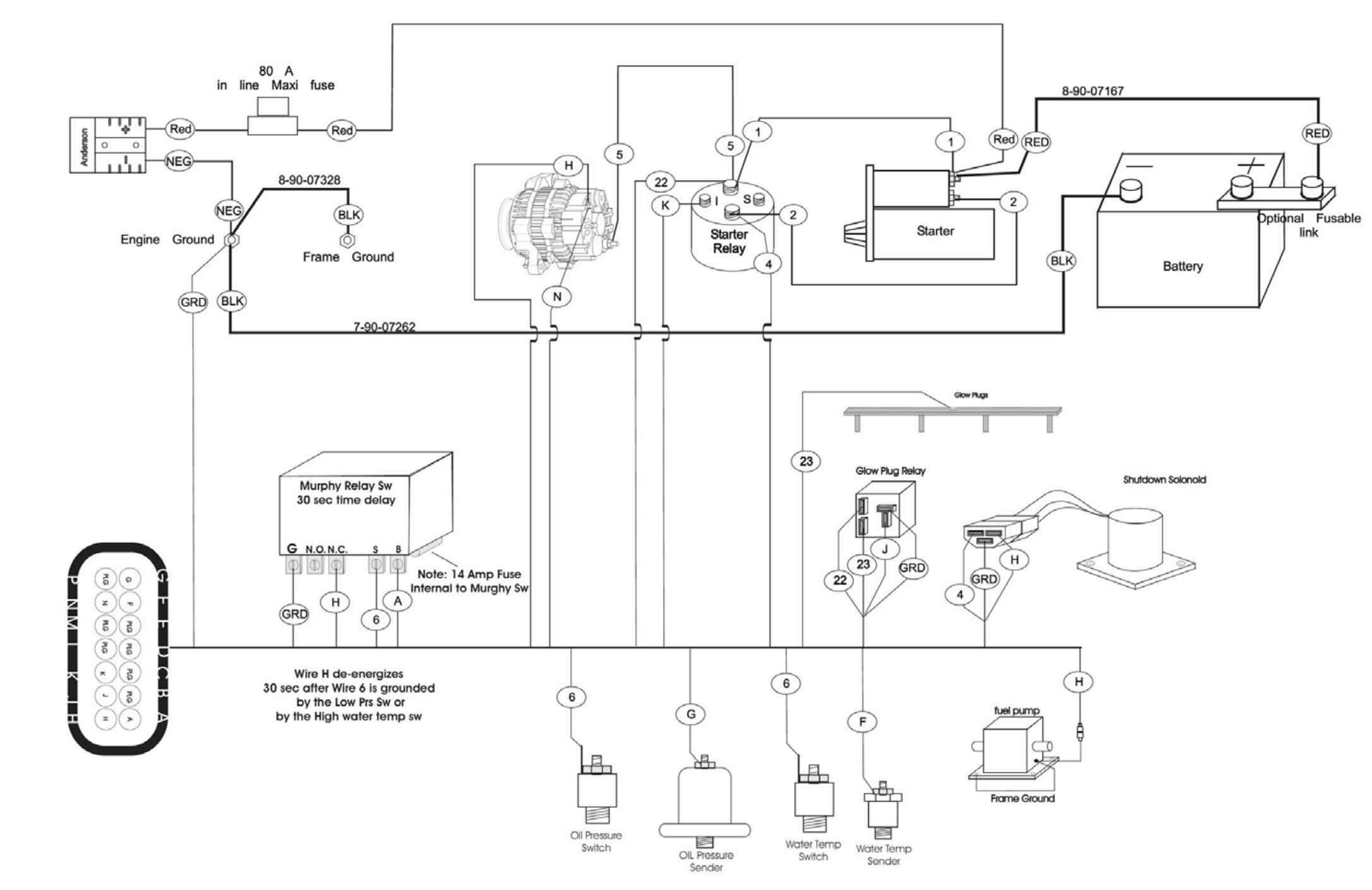

Engine Frame Side System – GM Gas

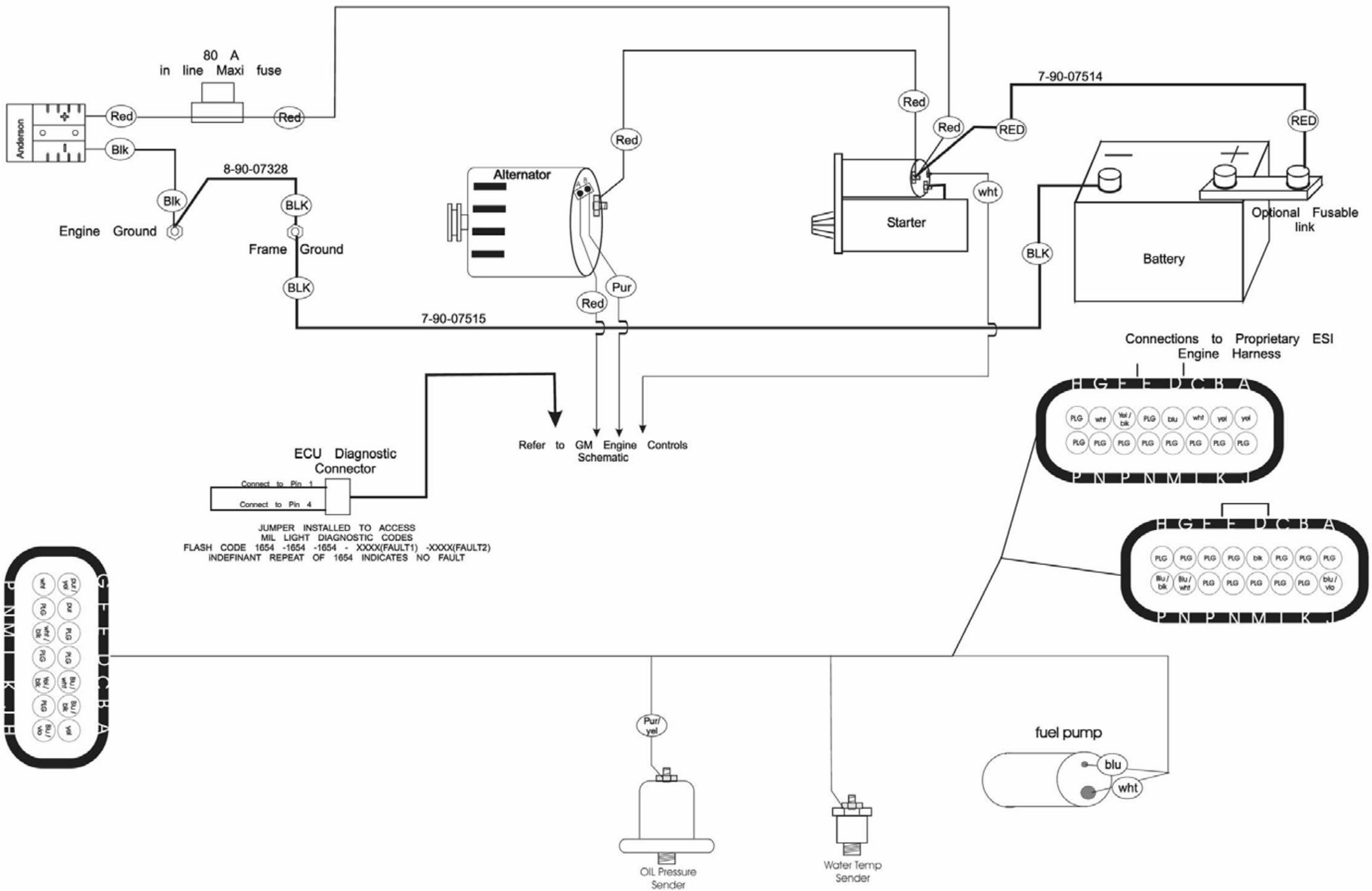

Engine Frame Side System – GM LPG

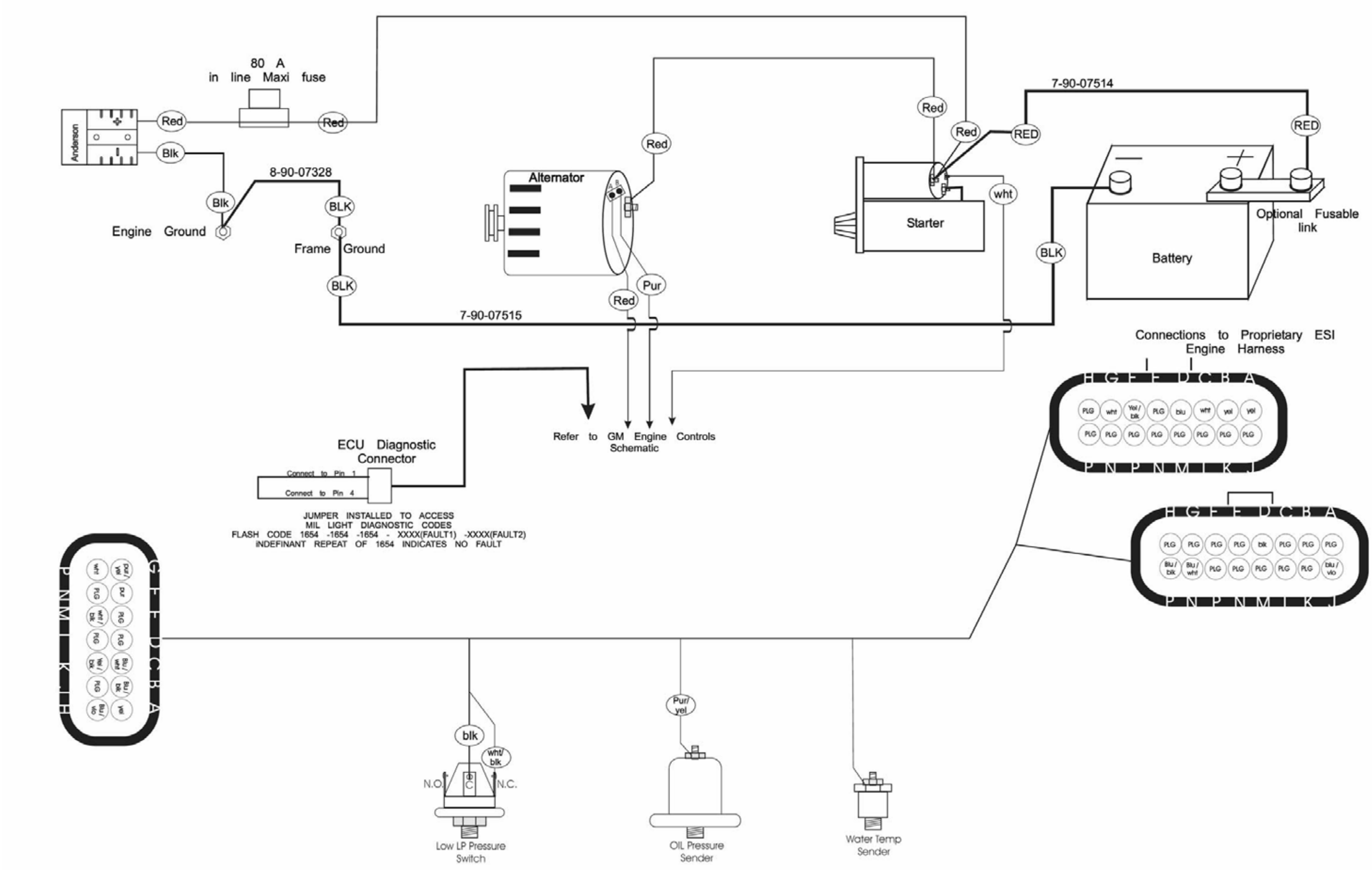

Scrub System Electrical System

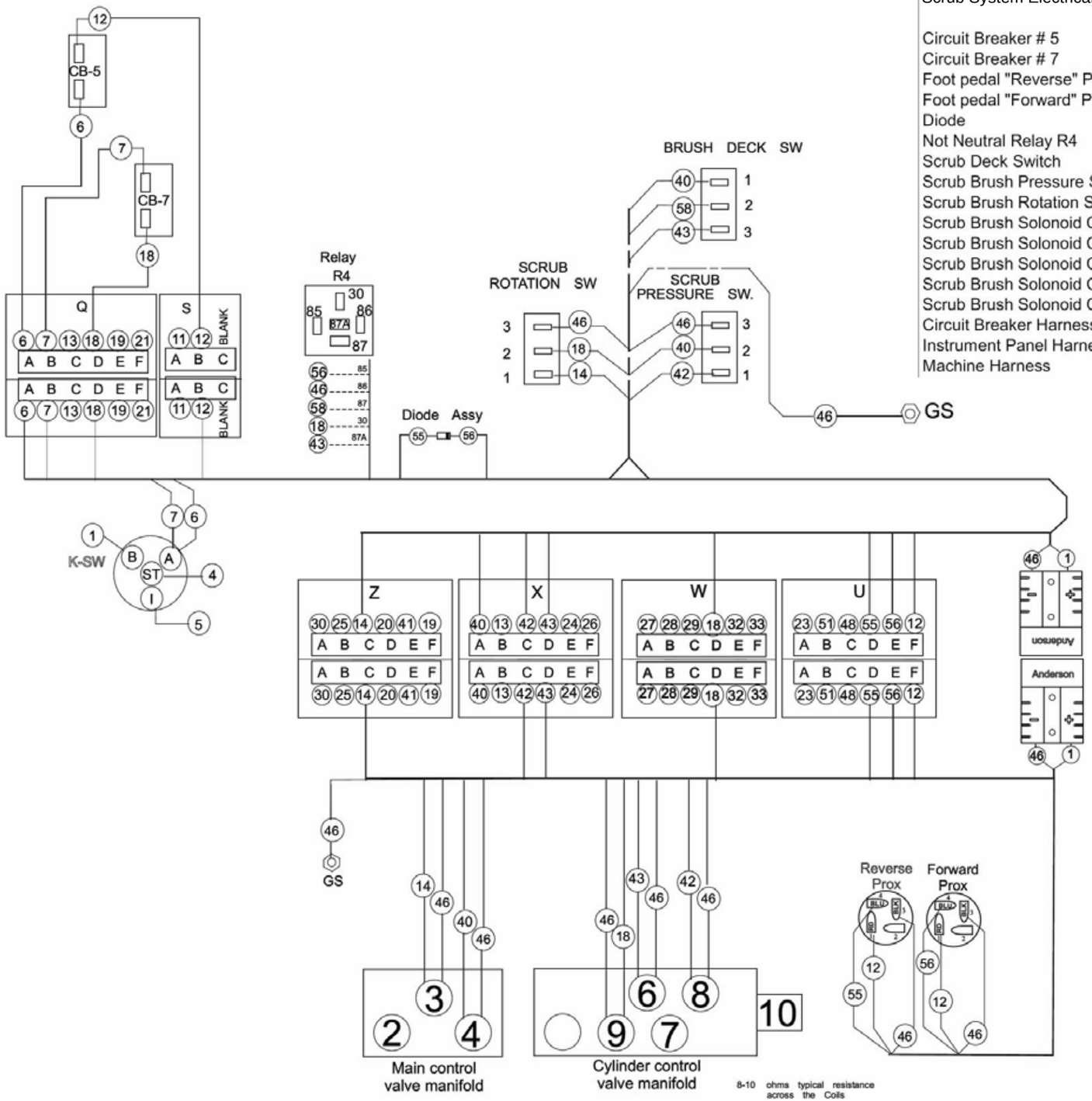

Scrub System Electrical Components	Part Number
Circuit Breaker # 5	8-64-00008
Circuit Breaker # 7	8-64-00008
Foot pedal "Reverse" Proximity Switch	7-82-00047
Foot pedal "Forward" Proximity Switch	7-82-00047
Diode	0775-281
Not Neutral Relay R4	8-64-05009
Scrub Deck Switch	7-82-00020
Scrub Brush Pressure Switch	7-82-00019
Scrub Brush Rotation Sw	7-82-00019
Scrub Brush Solonoid Coil S-6	7-14-07004- Part of Assy 7-88-00069
Scrub Brush Solonoid Coil S-8	7-14-07004- Part of Assy 7-88-00069
Scrub Brush Solonoid Coil S-3	7-14-07005 -Part of Assy 7-88-00071
Scrub Brush Solonoid Coil S-4	7-14-07005 -Part of Assy 7-88-00071
Scrub Brush Solonoid Coil S-9	7-14-07004- Part of Assy 7-88-00069
Circuit Breaker Harness	0795-111
Instrument Panel Harness	0795-186
Machine Harness	0795-185

Shaker Motor and Hopper Electrical System

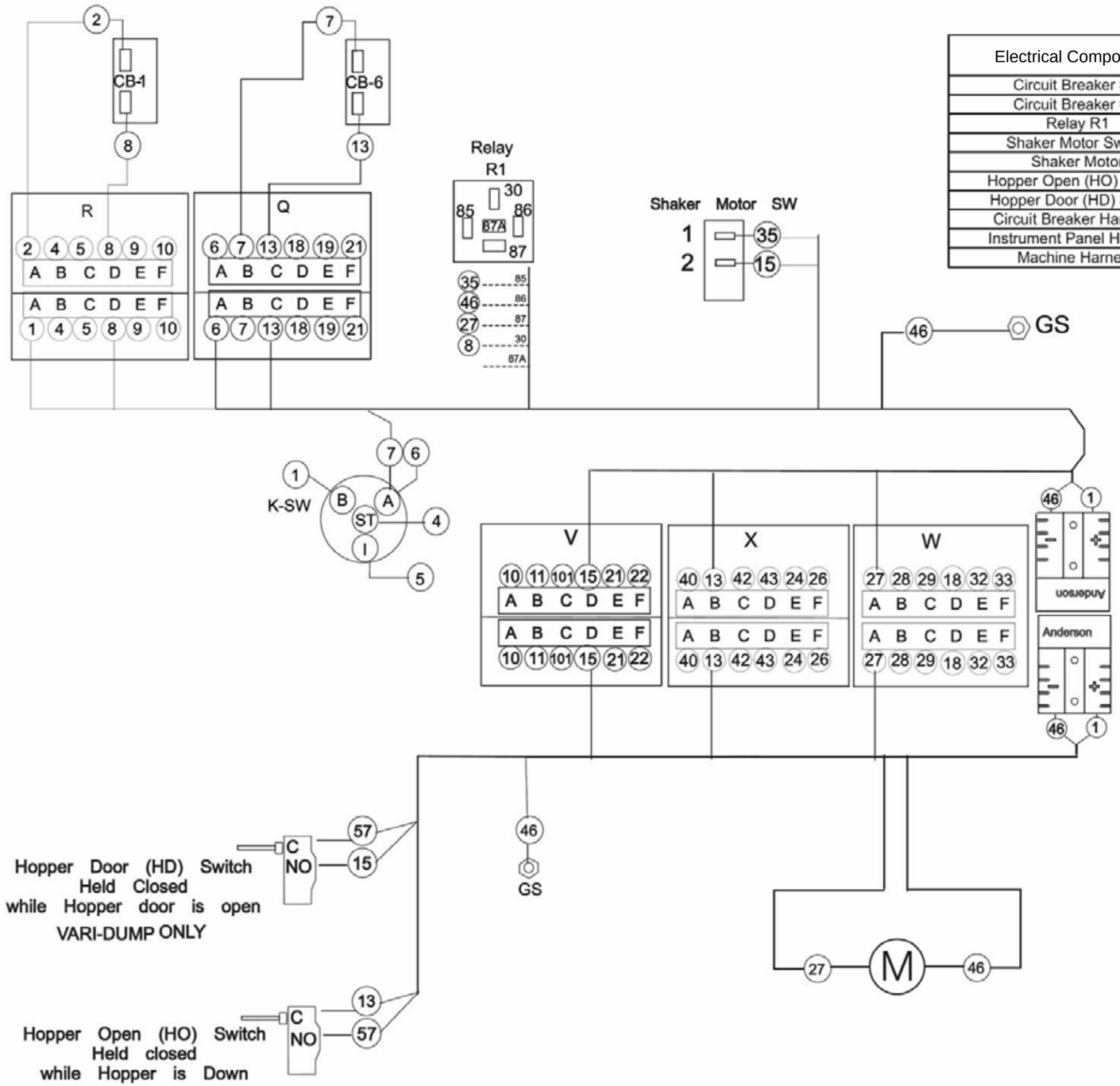

Electrical Components	Part Number
Circuit Breaker # 2	8-64-00008
Circuit Breaker # 6	8-64-00008
Relay R1	8-64-05009
Shaker Motor Switch	8-82-00045
Shaker Motor	0860-623
Hopper Open (HO) Switch	8-82-00058
Hopper Door (HD) Switch	8-82-00058
Circuit Breaker Harness	0795-111
Instrument Panel Harness	0795-186
Machine Harness	0795-185

Squeegee and Vacuum Fan Motor Electrical System

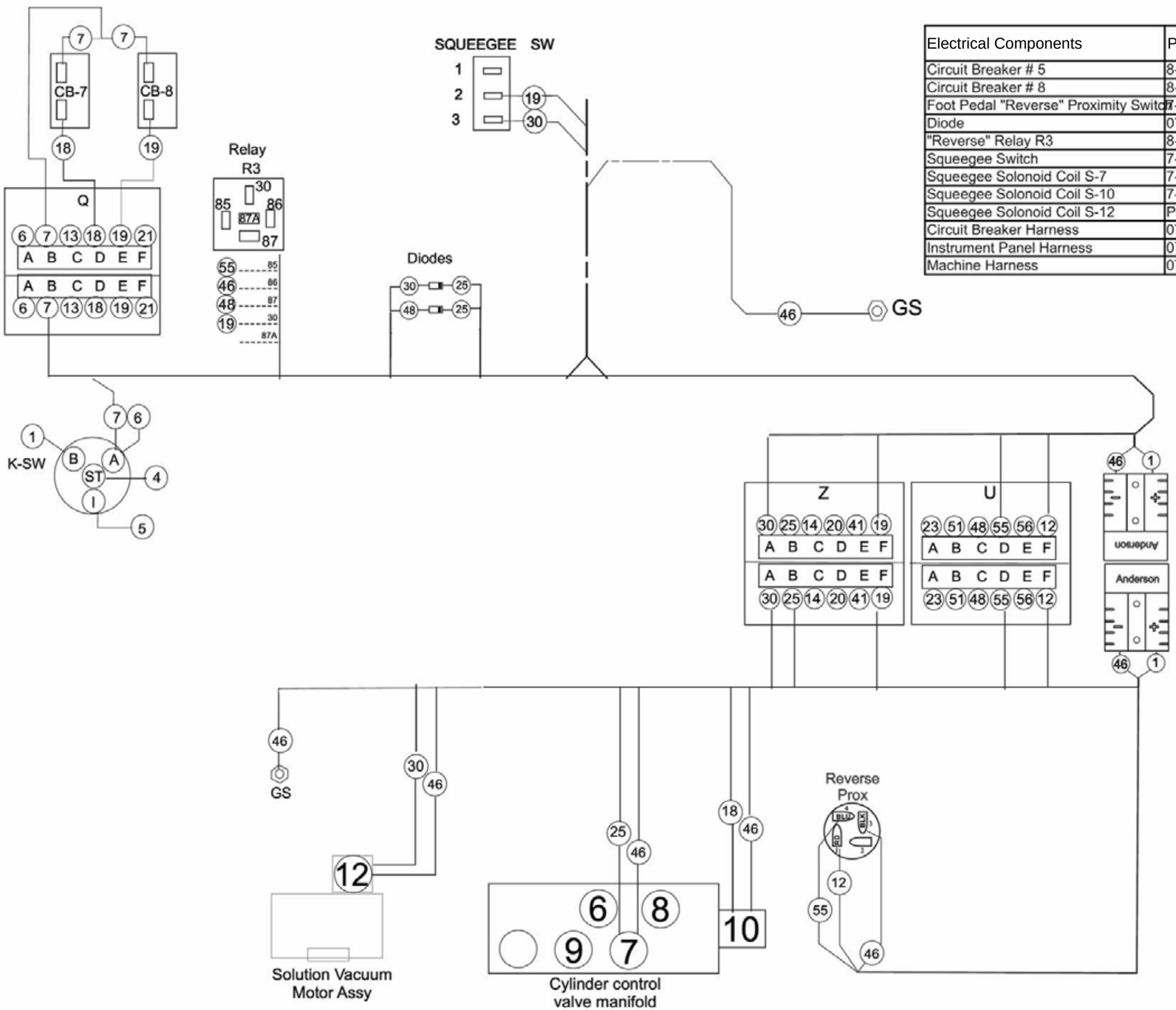

Electrical Components	Part Number
Circuit Breaker # 5	8-64-00008
Circuit Breaker # 8	8-64-00008
Foot Pedal "Reverse" Proximity Switch	7-82-00047
Diode	0775-281
"Reverse" Relay R3	8-64-05009
Squeegee Switch	7-82-00020
Squeegee Solonoid Coil S-7	7-14-07004- Part of Assy 7-88-00069
Squeegee Solonoid Coil S-10	7-14-07004- Part of Assy 7-88-00069
Squeegee Solonoid Coil S-12	Part of 0782-145
Circuit Breaker Harness	0795-111
Instrument Panel Harness	0795-186
Machine Harness	0795-185

Instrument Harness 0795-186 Rev G

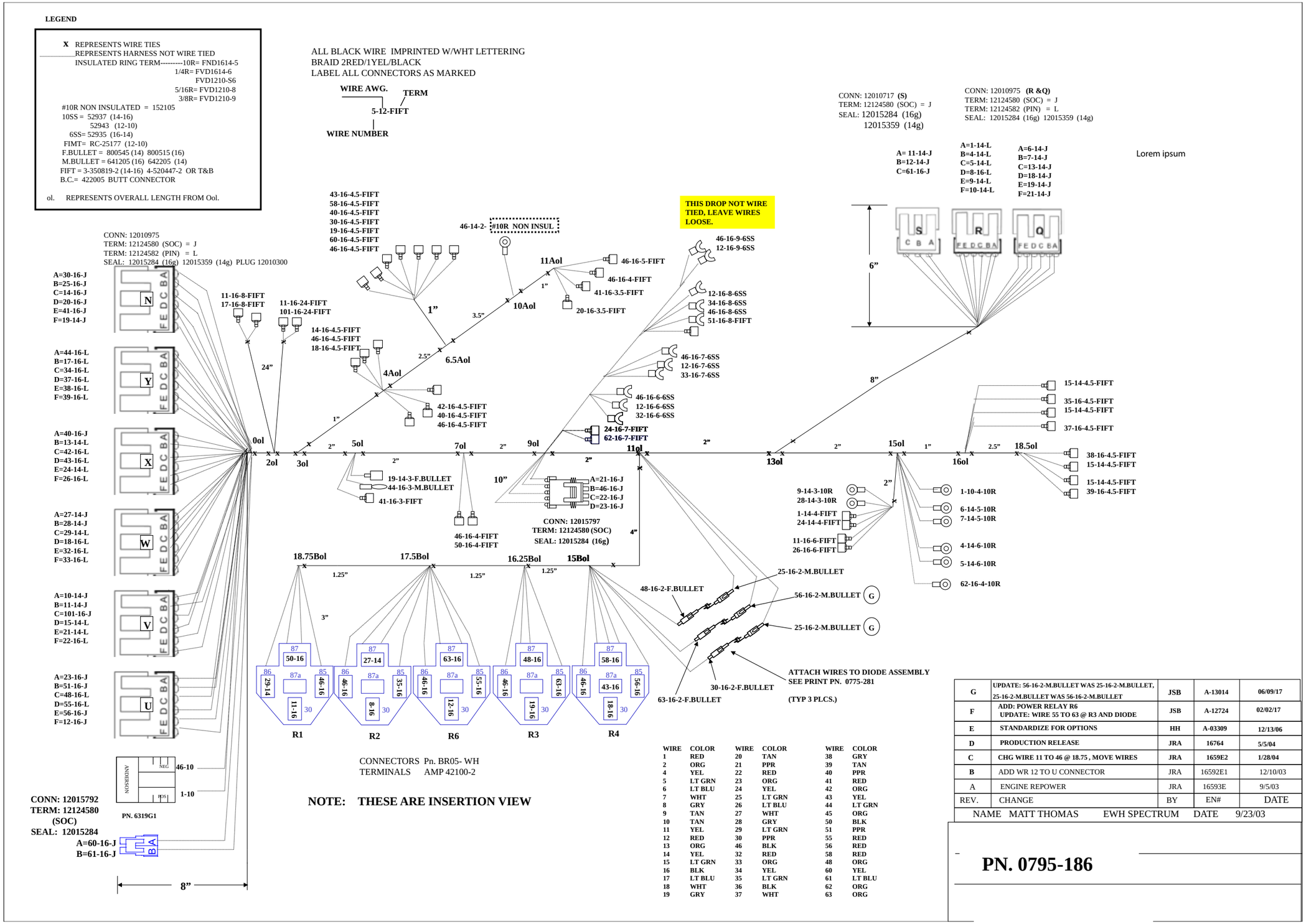

WIRE	COLOR	WIRE	COLOR	WIRE	COLOR
1	RED	20	TAN	38	GRY
2	ORG	21	PPR	39	TAN
4	YEL	22	RED	40	PPR
5	LT GRN	23	ORG	41	RED
6	LT BLU	24	YEL	42	ORG
7	WHT	25	LT GRN	43	YEL
8	GRY	26	LT BLU	44	LT GRN
9	TAN	27	WHT	45	ORG
10	TAN	28	GRY	50	BLK
11	YEL	29	LT GRN	51	PPR
12	RED	30	PPR	55	RED
13	ORG	46	BLK	56	RED
14	YEL	32	RED	58	RED
15	LT GRN	33	ORG	48	ORG
16	BLK	34	YEL	60	YEL
17	LT BLU	35	LT GRN	61	LT BLU
18	WHT	36	BLK	62	ORG
19	GRY	37	WHT	63	ORG

REV.	CHANGE	BY	EN#	DATE
G	UPDATE: 56-16-2-M.BULLET WAS 25-16-2-M.BULLET, 25-16-2-M.BULLET WAS 56-16-2-M.BULLET	JSB	A-13014	06/09/17
F	ADD: POWER RELAY R6 UPDATE: WIRE 55 TO 63 @ R3 AND DIODE	JSB	A-12724	02/02/17
E	STANDARDIZE FOR OPTIONS	HH	A-03309	12/13/06
D	PRODUCTION RELEASE	JRA	16764	5/5/04
C	CHG WIRE 11 TO 46 @ 18.75 , MOVE WIRES	JRA	1659E2	1/28/04
B	ADD WR 12 TO U CONNECTOR	JRA	16592E1	12/10/03
A	ENGINE REPOWER	JRA	16593E	9/5/03

NAME MATT THOMAS EWH SPECTRUM DATE 9/23/03

PN. 0795-186

Component Locations

Battery

The **Battery** sits on the swing-out **Battery Access Door**. To access the **Battery**, flip the seat over, rotate the **U-clip** and swing open the **Battery Access Door**.

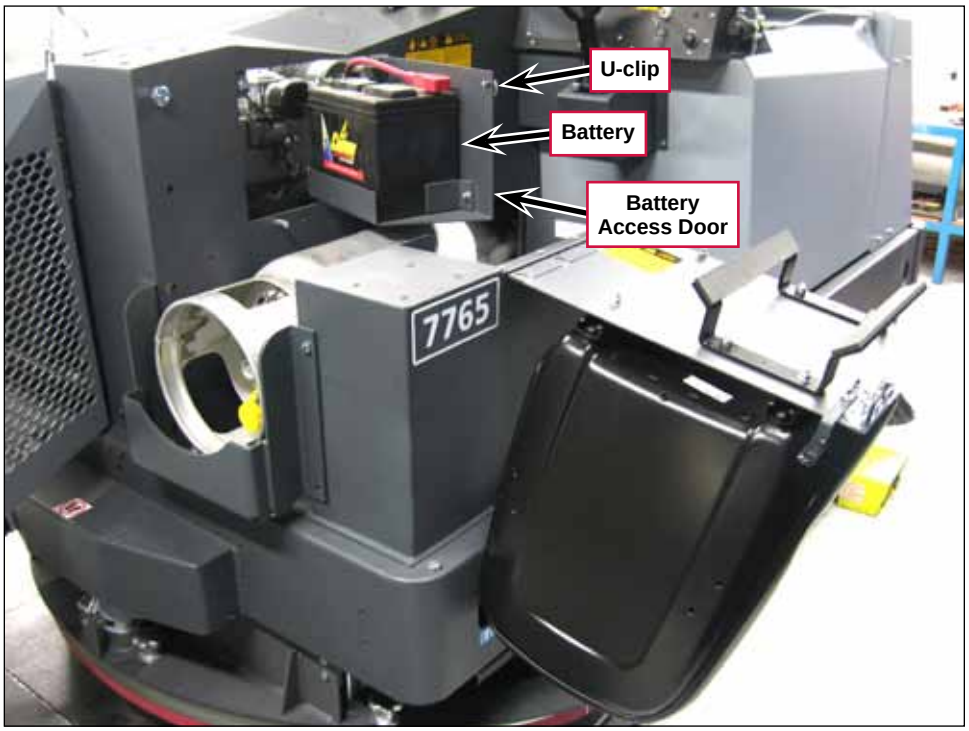

Relays

The **Relays** are mounted onto a **Bracket** which is fastened to the back of the **Instrument Panel Weldment**. Early models did not use the R6 power relay which was added around April 2017.

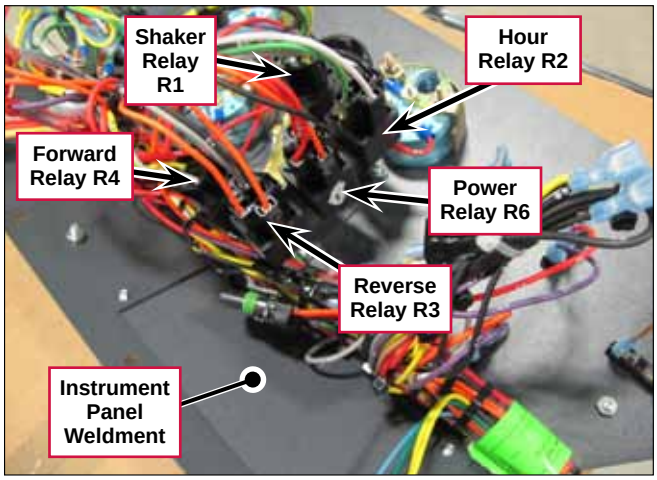

Late Model with R6 Power Relay

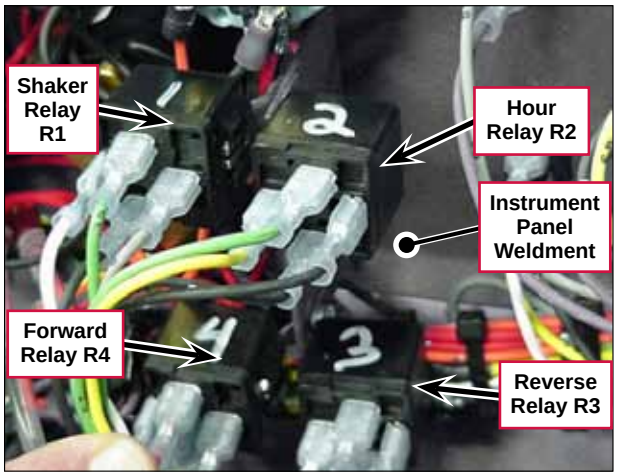

Early Model without R6 Power Relay

Instrument Panel

The gauges, lights and switches are mounted to the instrument panel.

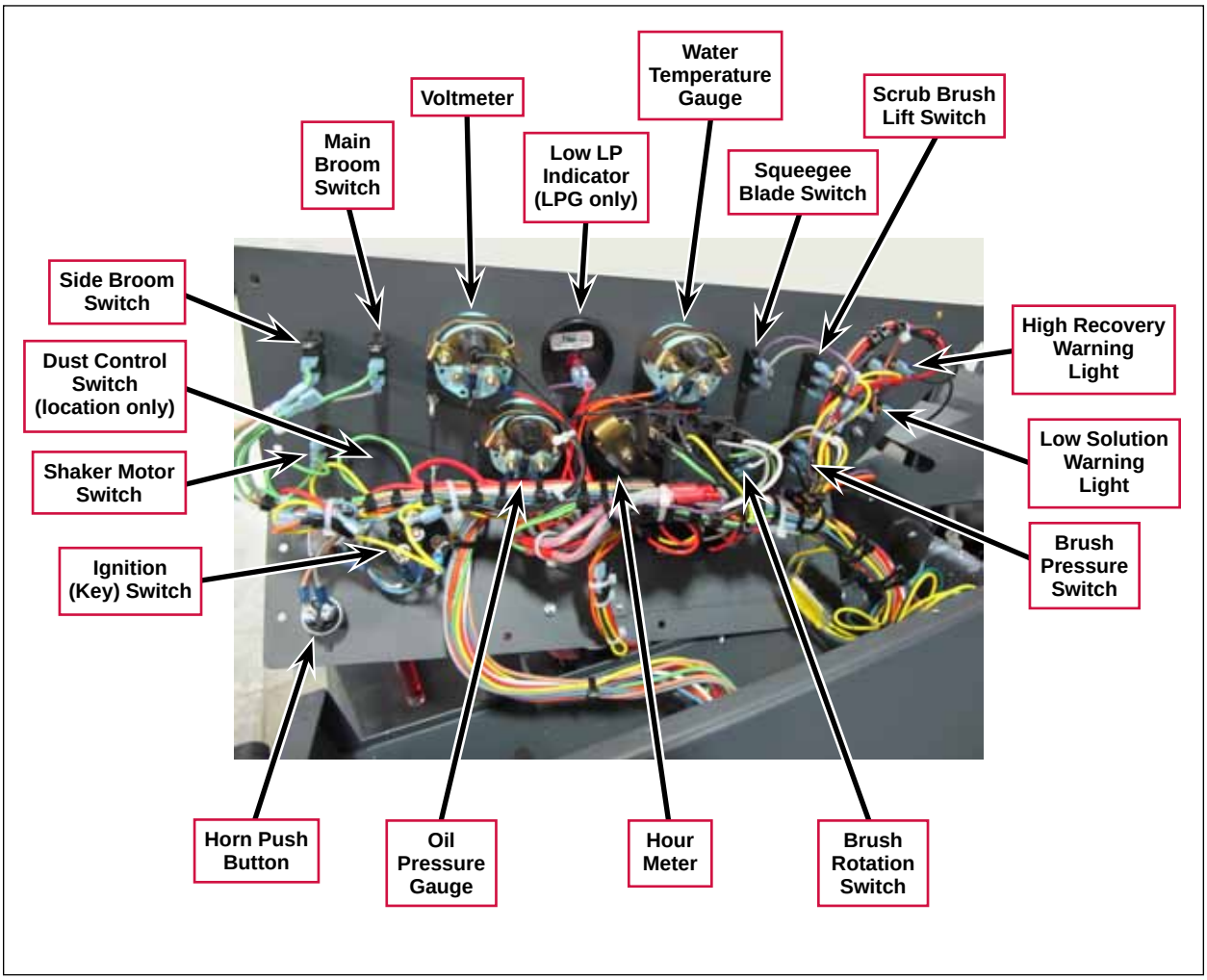

Circuit Breakers

The 10 15-amp **Circuit Breakers** are mounted to the right of the instrument panel. To access the **Circuit Breakers**, open the solution tank cover.

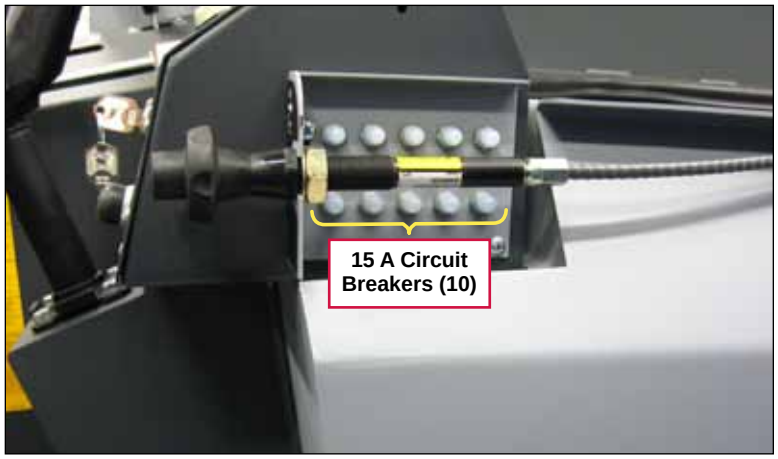

Foot Pedal Proximity Switches

The **Foot Pedal Proximity Switches** (sensors) are mounted adjacent to the bottom section of the **Foot Pedal**, underneath the floor of the Operator compartment.

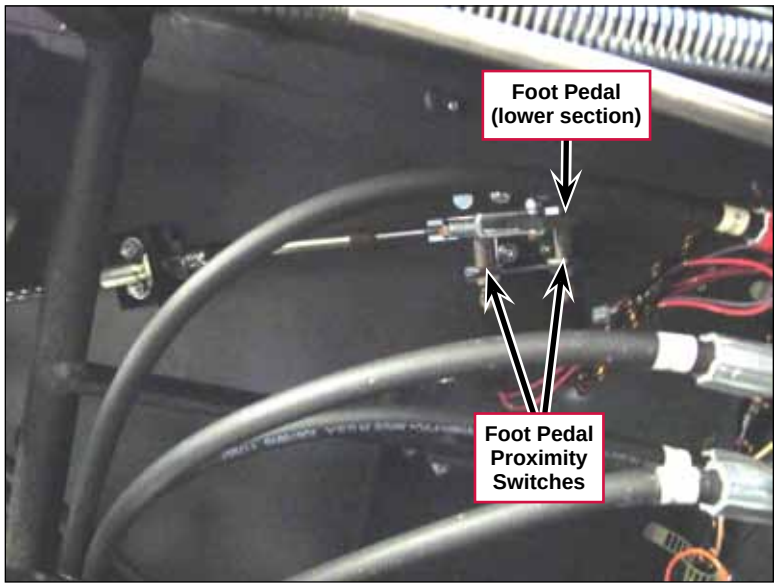

Troubleshooting

Problem	Cause	Correction
No power to the machine	Discharged battery.	Check the battery voltage and charge as necessary.
	Poor battery connection(s).	Check the battery cables, terminals and connections and tighten/repair/replace as necessary.
	Battery needs to be replaced.	Perform a load test on the battery and replace if necessary.

Note: *Refer to the individual machine system sections for electrical troubleshooting procedures.*

Specifications

Component Specifications

Component	Specifications
SPDT Relay (R4)	Operating Current – 140 mA
SPST Relay (R1, R2 and R3)	Nominal Coil Resistance – 85 ± 5 ohms

Engine System, Diesel

Functional Description

Overview

The diesel 7765/CR1500 machines use a Mitsubishi four-cylinder diesel engine to power the two hydraulic pumps that run the machine drive wheel, scrub/sweep systems, vacuum fan motor, the scrub/sweep and squeegee lift actuators and the steering system. A *Bosch* throttle type fuel injection pump controls the fuel quantity to maintain the selected RPM or shut the engine off.

Diesel Engine Wiring Diagram

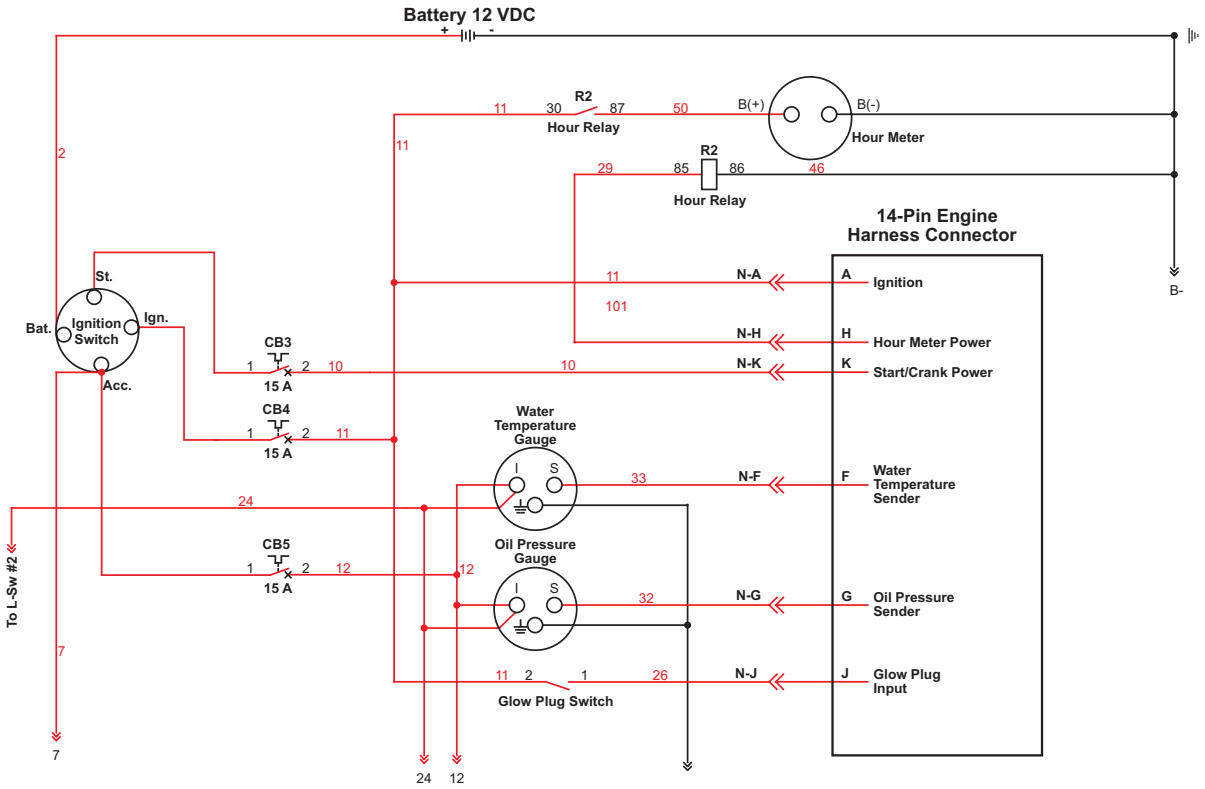

Circuit Description

- For the engine to start:
  - The **Ignition Switch** must provide positive voltage to the **Ignition** terminal **A** on the **14-pin Engine Harness Connector**, and to the **Glow Plug Switch**.
  - The **Glow Plug Switch** must be closed to provide positive voltage to the **Glow Plug Input** terminal **J** on the **14-pin Engine Harness Connector**.
  - The **St.** (start) terminal on the **Ignition Switch** must provide positive voltage to the **Start/Crank Power** terminal **K** on the **14-pin Engine Harness Connector**.
- For the engine to run, the coolant temperature and oil pressure must be within acceptable parameters.

Component Locations

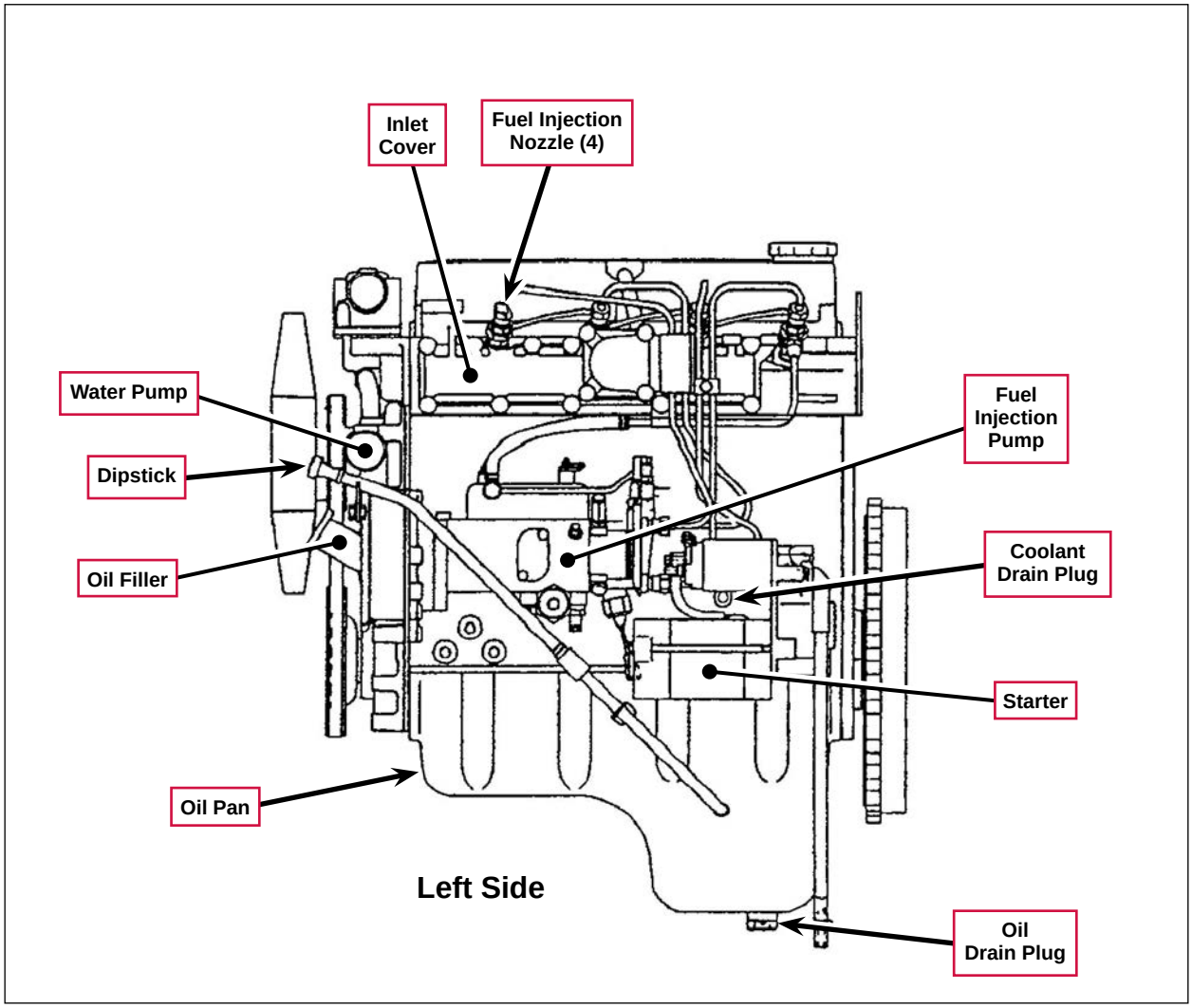

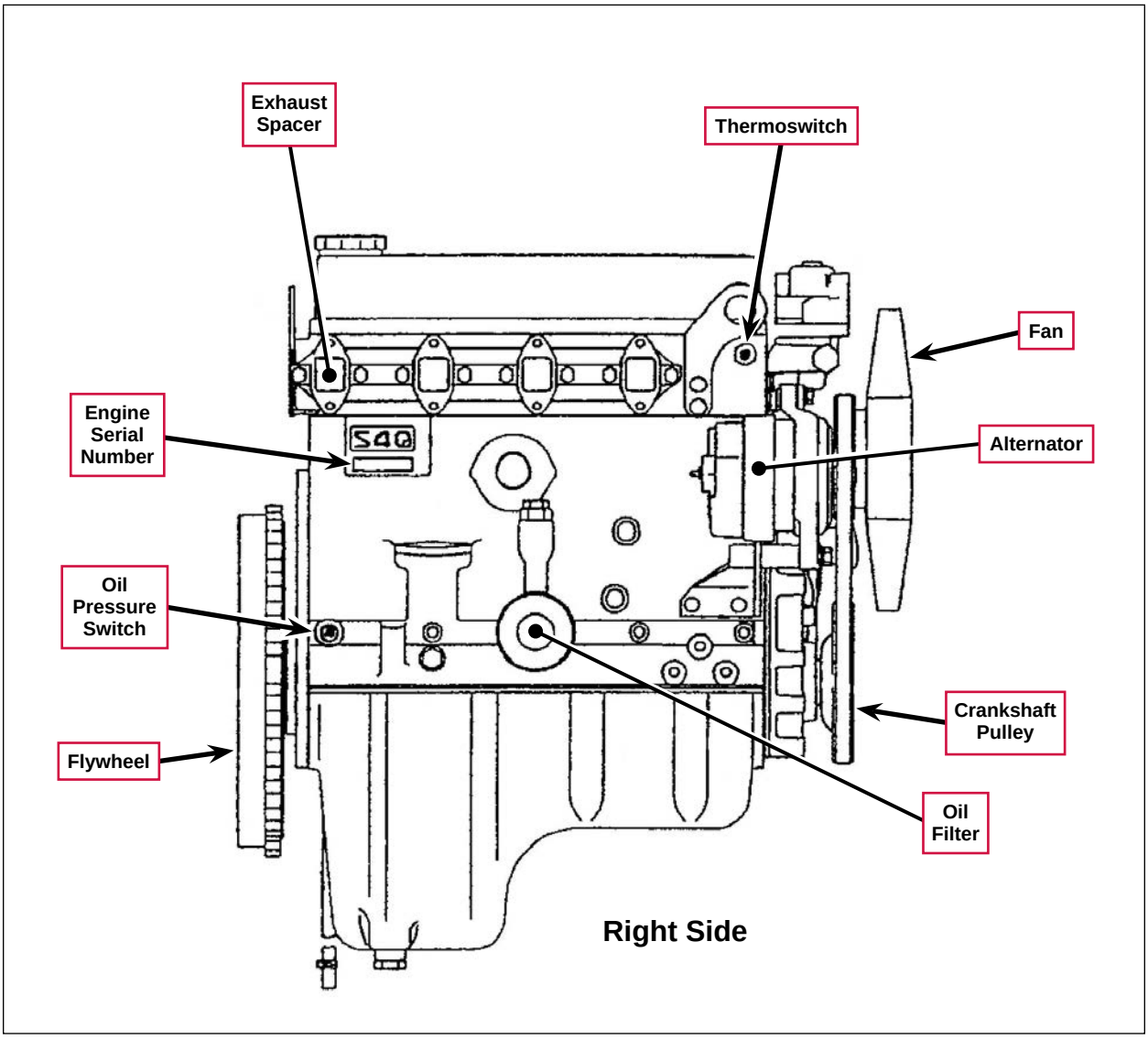
Exhaust Spacer
Thermoswitch
Fan
Engine Serial Number
Alternator
Oil Pressure Switch
Crankshaft Pulley
Flywheel
Oil Filter
Right Side

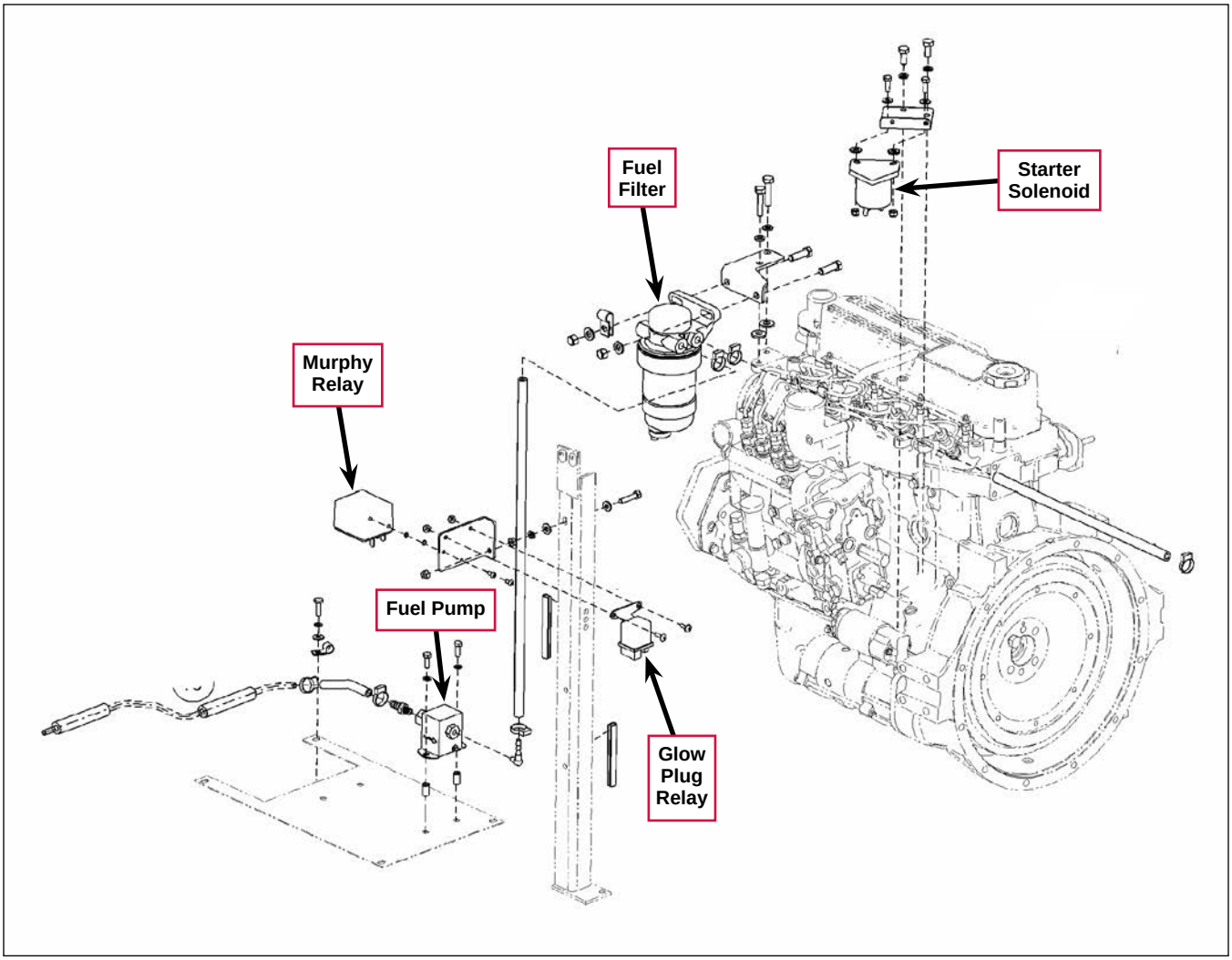
Fuel Filter
Starter Solenoid
Murphy Relay
Fuel Pump
Glow Plug Relay

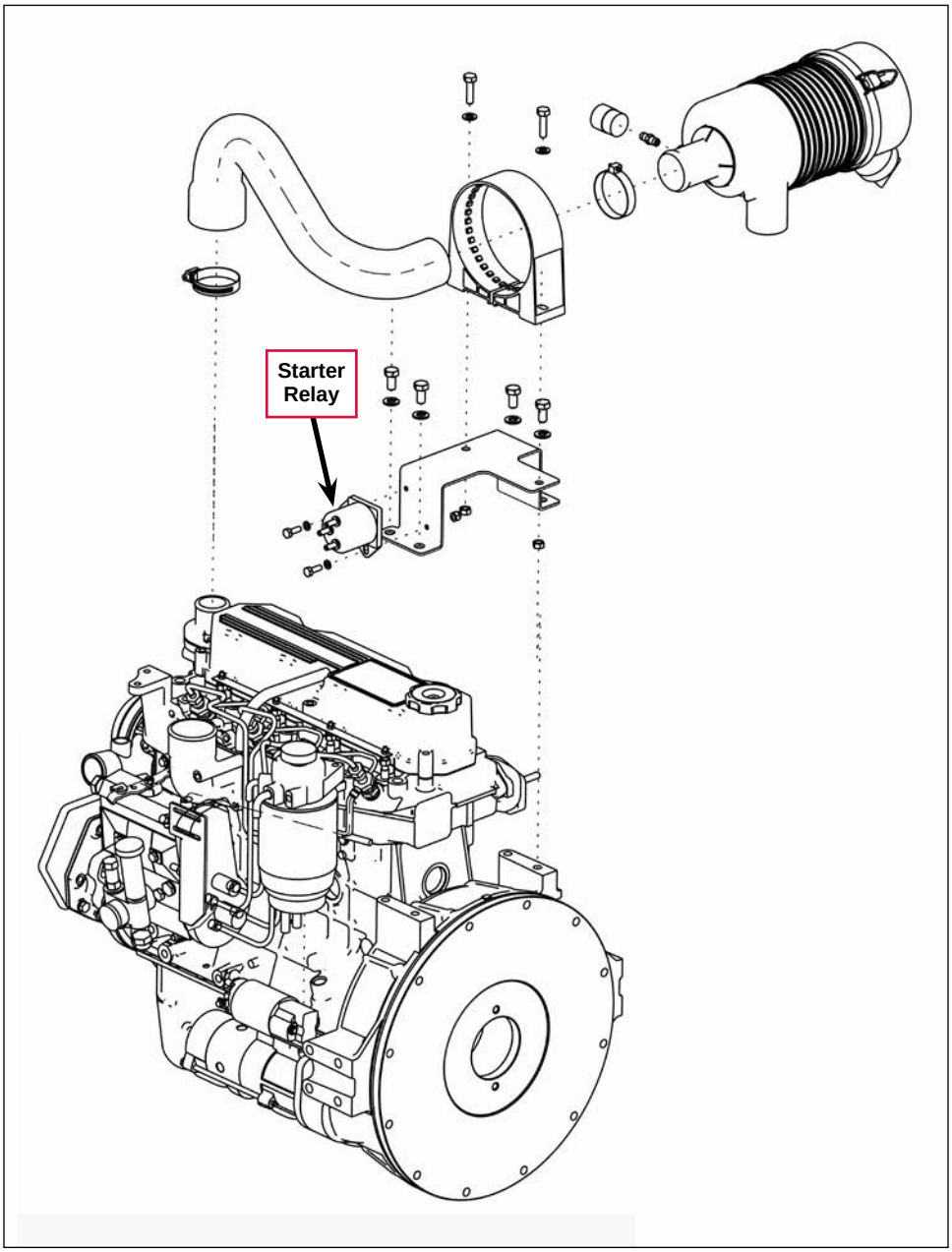
Starter
Relay

Maintenance and Adjustments

Warning! Before performing any machine maintenance or adjustments, make sure the parking brake is engaged, key switch is off and the key is removed from the machine.

Engine Oil

Check the engine oil level when the machine is parked on a level surface and the engine is cool. Change the engine oil and oil filter after the first 50 hours of operation, then every 250 service hours after that. Use CF, CF-4 or CG-4 oil meeting API specifications and suited temperatures.

* **Important:** Refer to the **Diesel Lubricating Oil Note** below for further diesel oil recommendations. Refer to the engine manufacturer's service manuals for oil capacities and additional engine specifications. Replace the oil filter with every oil change.

Temperature Range	Oil Weight
Above 77 °F (25 °C)	SAE 30 or 10W-30
32 °F to 77 °F (0 °C to 25 °C)	SAE 20 or 10W-30
Below 32 °F (0 °C)	SAE 10W or 10W-30

* **Diesel Lubricating Oil Note:**

With the emission control now in effect, the CF-4 and CG-4 lubricating oils have been developed for use with a low-sulfur fuel used in on-road vehicle engines. When an off-road vehicle engine runs on a high-sulfur fuel, it is advisable to employ the CF, CD or CE lubricating oil with a high total base number. If the CF-4 or CG-4 lubricating oil is used with a high-sulfur fuel, change the lubricating oil at shorter intervals.

Fuel / Lubricating Oil class	Low sulfur (0.5 % ≥)	High sulfur	Remarks
CF	O	O	TBN ≥ 10
CF-4	O	X	
CG-4	O	X	

O = Recommended X = Not Recommended

Engine Coolant

Checking Engine Coolant

Caution! Do not remove the radiator cap when the engine is hot.

To check the engine coolant level, open the engine cover and observe the coolant level in the coolant overflow tank. If the level is low, add a 50/50 mix of water and the recommended type antifreeze. Clean the radiator and oil cooler exteriors every 150 hours by washing with low-pressure water or using compressed air.

Replacing Engine Coolant

One possible cause of engine overheating is trapped air in the cooling system. It's recommended that you use a Cooling System Tool when changing the engine coolant. The Cooling System Tool pulls a vacuum on the cooling system prior to filling to prevent air from being trapped in the cooling system.

Note that there are several types of Cooling System Tools. The following instructions describe how to use a typical type of tool. Refer to the operating instructions included with your particular tool if different than the example shown here.

1. Connect a **Compressed Air Supply Line** to the fitting on the Cooling System Tool.
2. Connect the **Coolant Supply Line** to the Cooling System Tool. Make sure the **Coolant Valve** is closed.
3. Insert and hold the Cooling System Tool onto the radiator filler neck, then press the **Air Switch**. The compressed air travelling through the **Venturi Tube Assembly** will pull a vacuum on the cooling system to remove air from the system.
4. Once the vacuum reading on the **Gauge** reaches approximately 25 on the green scale, release the **Air Switch**. Note that this also a good opportunity to check for cooling system leaks,
5. Continue to hold the Cooling System Tool onto the radiator filler neck and open the **Coolant Valve** to allow coolant to flow into the radiator.
6. Once the pressure on the **Gauge** reaches approximately 5 on the red scale and the radiator is almost full, shut off the **Coolant Valve** and remove the Cooling System Tool from the radiator filler neck.
7. Top off the radiator and overflow tank as necessary.

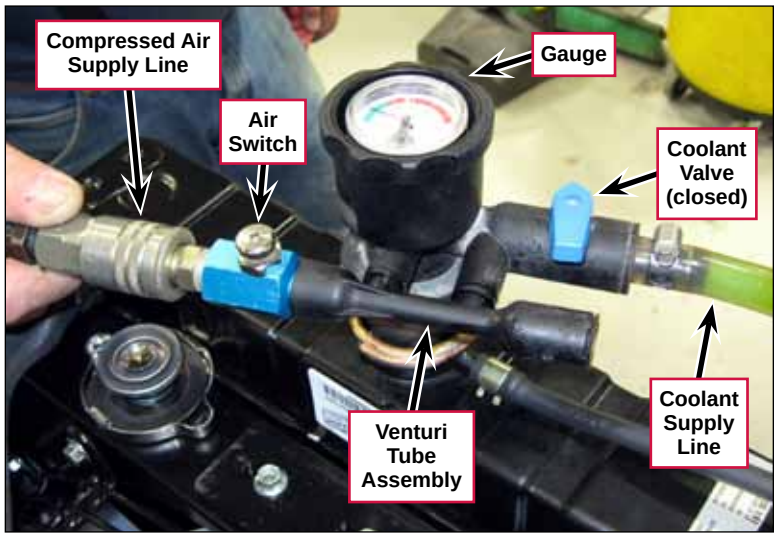

Removing the Air from the Cooling System with Cooling System Tool

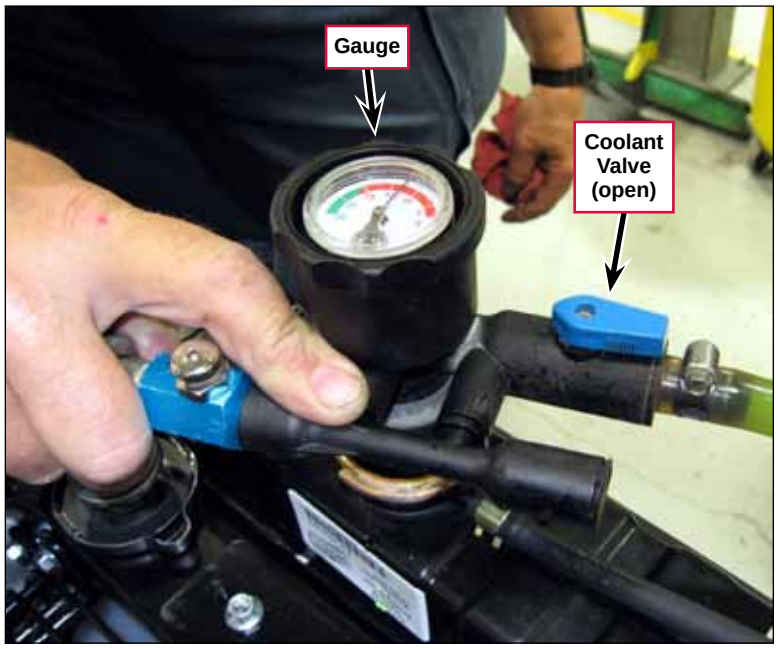

Filling Cooling System with Coolant

Engine Air Filter Maintenance

Check the engine air Filter Service Indicator before each use of the machine. Do not service the air filter unless the red flag is visible in the service indicator.

Caution! When servicing the engine air filter elements, use extreme care to prevent loose dust from entering the engine. Dust can severely damage the engine.

The engine air filter contains a primary (outer) and a safety (inner) filter element. The primary element can be cleaned twice before being replaced.

The safety element should be replaced every third time that the primary filter element is replaced. Never attempt to clean the inner safety element.

To clean the primary filter element:

1. Unlatch the two clips at the end of the air filter and remove the end housing.
2. Pull the primary element out.
3. Clean the element with compressed air (maximum pressure 100 psi) or wash it with water (maximum pressure 40 psi). **Do not** put the element back into the canister until it is completely dry.

Troubleshooting

Note: *Also refer to the Operation Manual for the Mitsubishi Diesel Engine, S4Q, S4Q2, for additional troubleshooting information and procedures.*

General Troubleshooting

Problem	Cause	Correction
The engine will not crank.	No power to pin K on the 14-pin Engine Harness Connector.	• Check circuit breaker CB3 and reset if necessary. • Check the continuity from the Ignition Switch to pin K on the 14-pin Engine Harness Connector and repair as necessary.
The engine will not start.	No power to pin J on the 14-pin Engine Harness Connector.	• Check circuit breaker CB4 and reset if necessary. • Check the continuity from the Ignition Switch to the Glow Plug Switch and repair as necessary. • Check the continuity from the Glow Plug Switch to pin J on the 14-pin Engine Harness Connector and repair as necessary.
	No power to pin A on the 14-pin Engine Harness Connector.	• Check circuit breaker CB4 and reset if necessary. • Check the continuity from the Ignition Switch to A on the 14-pin Engine Harness Connector and repair as necessary.

Problem	Cause	Correction
The engine will not start (continued).	The Murphy relay is not sending voltage to the fuel pump.	• Check the wiring to the Murphy relay, and from the Murphy relay to the fuel pump (wire H) and correct as necessary. • Check the Murphy relay for correct function and replace if necessary. • Check wire 6 on the Murphy relay for connection to ground. If wire 6 is grounded, check the oil pressure switch, water temperature switch and associated wiring for correct function and replace as necessary.
The engine stops running, check engine light is on.	The coolant temperature is too high.	Refer to the ***Engine Overheating Problems*** section below.
	The oil pressure has dropped below the minimum acceptable pressure.	Refer to the ***Loss of Oil Pressure Protection*** section below.

Engine Overheating Problems

When the water temperature switch senses that the coolant temperature is too high, it grounds out wire 6 to the Murphy relay. After 30 seconds the Murphy relay switches off the voltage to the fuel pump to stop the engine.

Use the checklist below as a guide to thoroughly check the engine cooling system.

- Check the coolant level in the overflow tank and radiator.
- Inspect and clean the radiator and hydraulic oil cooler.
- Check for correct operation of the belt-driven engine cooling fan (slippage).
- Check to see that the engine thermostat opens.
- Check for correct water pump operation.
- Check the engine crankcase oil level.
- Check for air trapped in the cooling system. (Refer to the ***Engine Coolant/Replacing Engine Coolant*** section.)
- Check the water temperature switch for correct function as replace if necessary.

Loss of Oil Pressure Protection

When the oil pressure switch senses that the oil pressure has dropped below the minimum acceptable pressure, it grounds out wire 6 to the Murphy relay. After 30 seconds the Murphy relay switches off the voltage to the fuel pump to stop the engine.

Check for possible causes for low oil pressure such as:

- Engine crankcase level is low.
- Incorrect oil viscosity.
- Fault in oil pressure switch.
- Excessive engine wear or defective internal oil pump (relief valve)

Specifications

Mitsubishi S4Q2 Diesel		
Engine Type	Water cooled, four-cylinder, four-stroke diesel engine	
Displacement	153 cubic inches [2.505 L]	
Bore and Stroke	3.46” x 4.06” [88 mm x 103 mm]	
Compression Ratio	22:1	
Engine Firing Order	1-3-4-2	
Rotation	Counterclockwise (as viewed from the flywheel end)	
Fuel System	Fuel Injector Pump	Bosch Throttle Type
	Fuel Filter	Cartridge Type
	Fuel Injection Nozzle	Throttle Type
	Injection Pressure (valve opening pressure)	120-130 kgf/cm^2
		1,706-1,848 psi
		11,768-12,749 kPa

Mitsubishi S4Q2 Diesel			
Lubrication System	Type		Force Feed
	Engine Oil		API Service Classification CC
	Engine Oil Capacity	Oil Pan – 1.8 US gallons [7 L]	
		Complete System – 2.1 US gallons [8 L]	
	Oil Filter		Cartridge Type w/built-in bypass valve
Cooling System	Type		Pressure
	Capacity (complete system)		1 US gallon [3.7 L]

Special Tools

Cooling System Tool	

Engine System, Gasoline/LPG

Functional Description

Overview

The gasoline (petrol) and LPG 7765/CR1500 machines use a four-cylinder 3.0L GM engine to power the two hydraulic pumps that run the machine drive wheel, scrub brushes, squeegee vacuum fan motor, side and main brooms, steering system, and the scrub deck and squeegee deck lift cylinders. Gasoline engines use fuel injectors. The LPG engine uses an electronically-controlled vaporizer/pressure regulator.

GM Engine Wiring Diagram

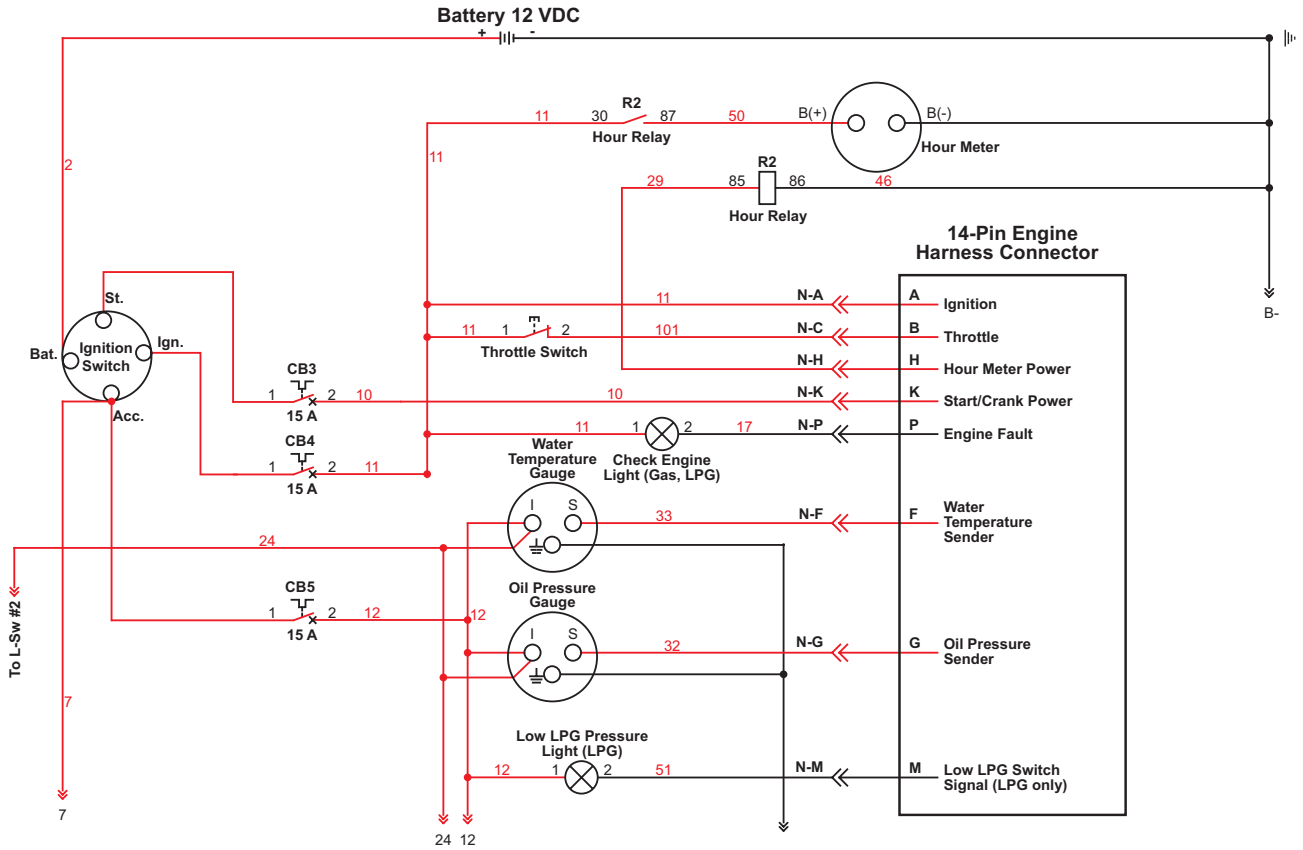

Circuit Description

- For the engine to start:
  - The **Ignition Switch** must provide positive voltage to the **Ignition** terminal **A** on the **14-pin Engine Harness Connector**.
  - The **St.** (start) terminal on the **Ignition Switch** must provide positive voltage to the **Start/Crank Power** terminal **K** on the **14-pin Engine Harness Connector**.
- For the engine to run, the coolant temperature and oil pressure must be within acceptable parameters.

GM 3.0L Gasoline Fuel System Description

This engine is equipped with a fuel injector rail that does not have a pressure regulator or a return circuit to the fuel tank. Fuel pressure for this engine is regulated by the engine's Engine Control Module (ECM). The ECM receives fuel pressure and temperature feedback from the gasoline fuel sensor manifold and uses this information to control the ground side of the fuel pump.

Fuel pressure is regulated by the ECM pulse width modulating (PWM) the fuel pump. The fuel pressure and temperature sensor manifold has a return or "bleed" circuit that connects back to the equipment fuel tank. This circuit is used to bleed off any vapor that develops in the line and returns a small amount of fuel to the tank.

The fuel comes from the fuel tank and passes through the fuel pump. Fuel exits the fuel pump, passes through the filter and then enters the fuel pressure and temperature manifold assembly. Fuel flows through the feed circuit and is delivered to the fuel injector rail. Fuel that enters the bleed circuits through the bypass valve in the manifold is returned to the fuel tank.

GM 3.0L LPG Fuel System Description

The fuel system on LPG engines includes a Direct Electronic Pressure Regulator (DEPR), air/fuel mixer, Electronic Throttle Control (ETC) device and an Engine Control Module (ECM).

An Electric Fuel lock-off valve, consisting of a 12 volt solenoid and a normally-closed valve, opens during cranking and engine run cycles. The ECM controls the voltage to the Electric Fuel lock-off valve.

The DEPR is an electromechanical fuel pressure regulator that communicates with the ECM to regulate the fuel pressure. The air/fuel mixer is a self-contained air-fuel metering device that is mounted in the air stream ahead of the throttle control device. The ECM and the ETC control the engine speed.

Note: *For a more detailed and thorough description of the LPG fuel system, refer to the* PSI Tier 3 Certified Mobile Diagnostic and Troubleshooting Manual*, publication number* PSITIER3 - G.

Component Locations

LPG and Gasoline

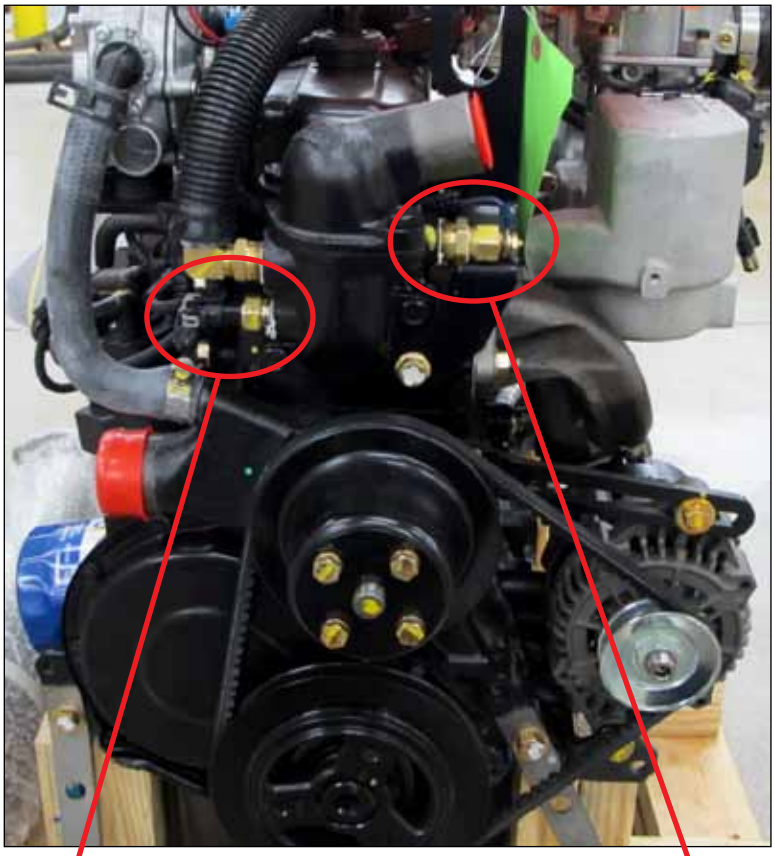

ECT (Engine Coolant Temperature) Sensor

Engine Coolant Switch

Engine Fuse Box

Ignition Coil and Ignition Module

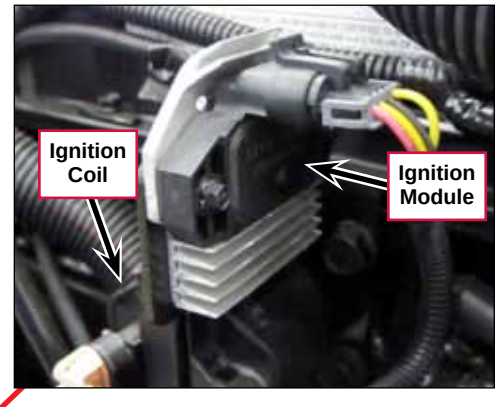

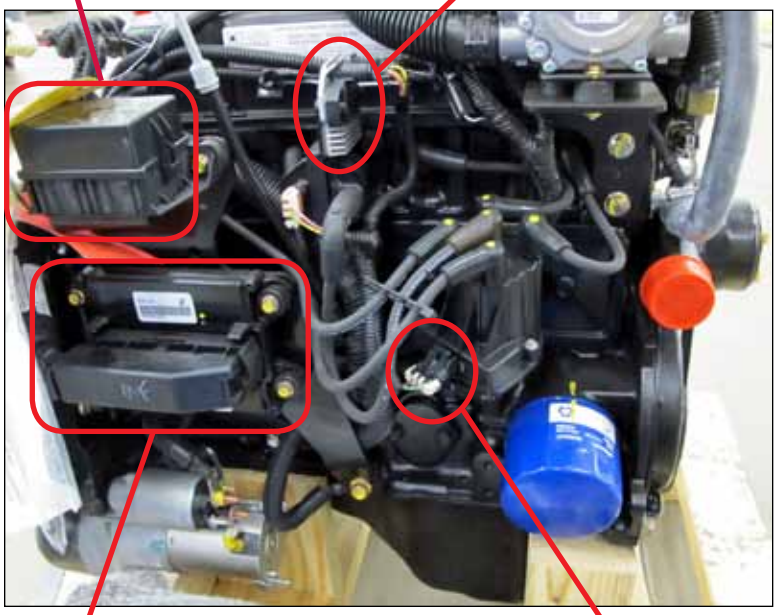

Engine Control Module

Cam Sensor

Oil Pressure Sensor

Ground Connection

Temperature/Manifold Absolute Pressure (TMAP) Sensor

Crank Position Sensor

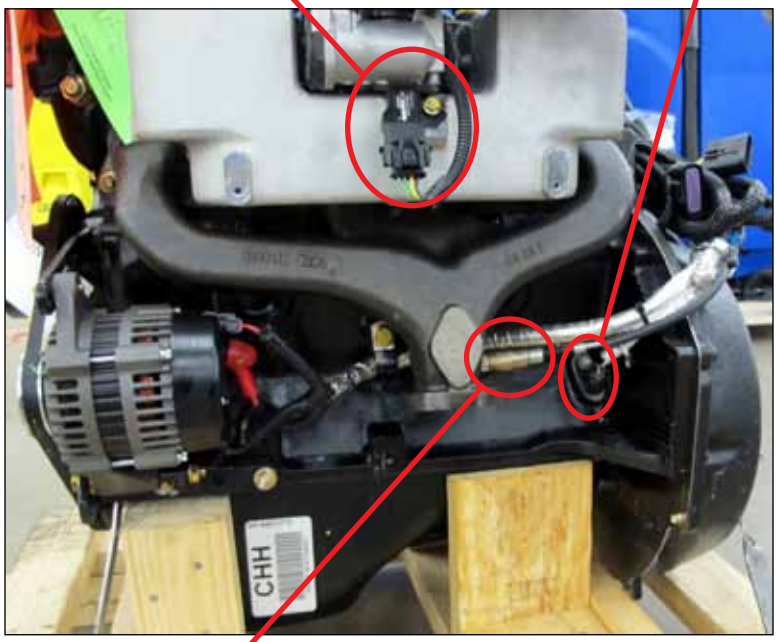

Upstream (Pre-CAT) O_2 Sensor

Downstream (Post-CAT) O_2 Sensor (shown on machine)

LPG

LP Vaporizer/Regulator,
LP Safety Lock-out Solenoid

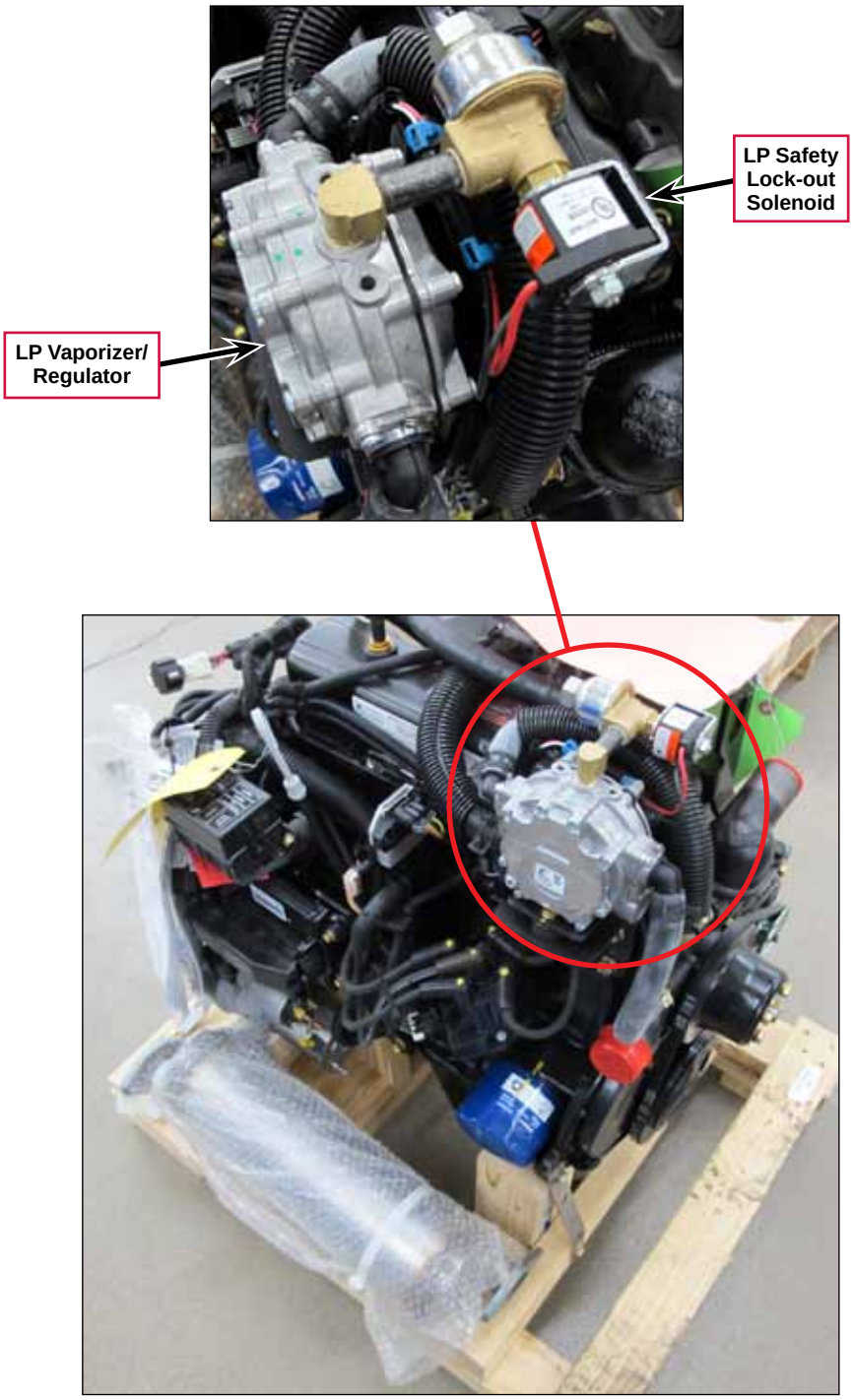

Direct Electronic Pressure Regulator (DEPR) and Air/Fuel Mixer

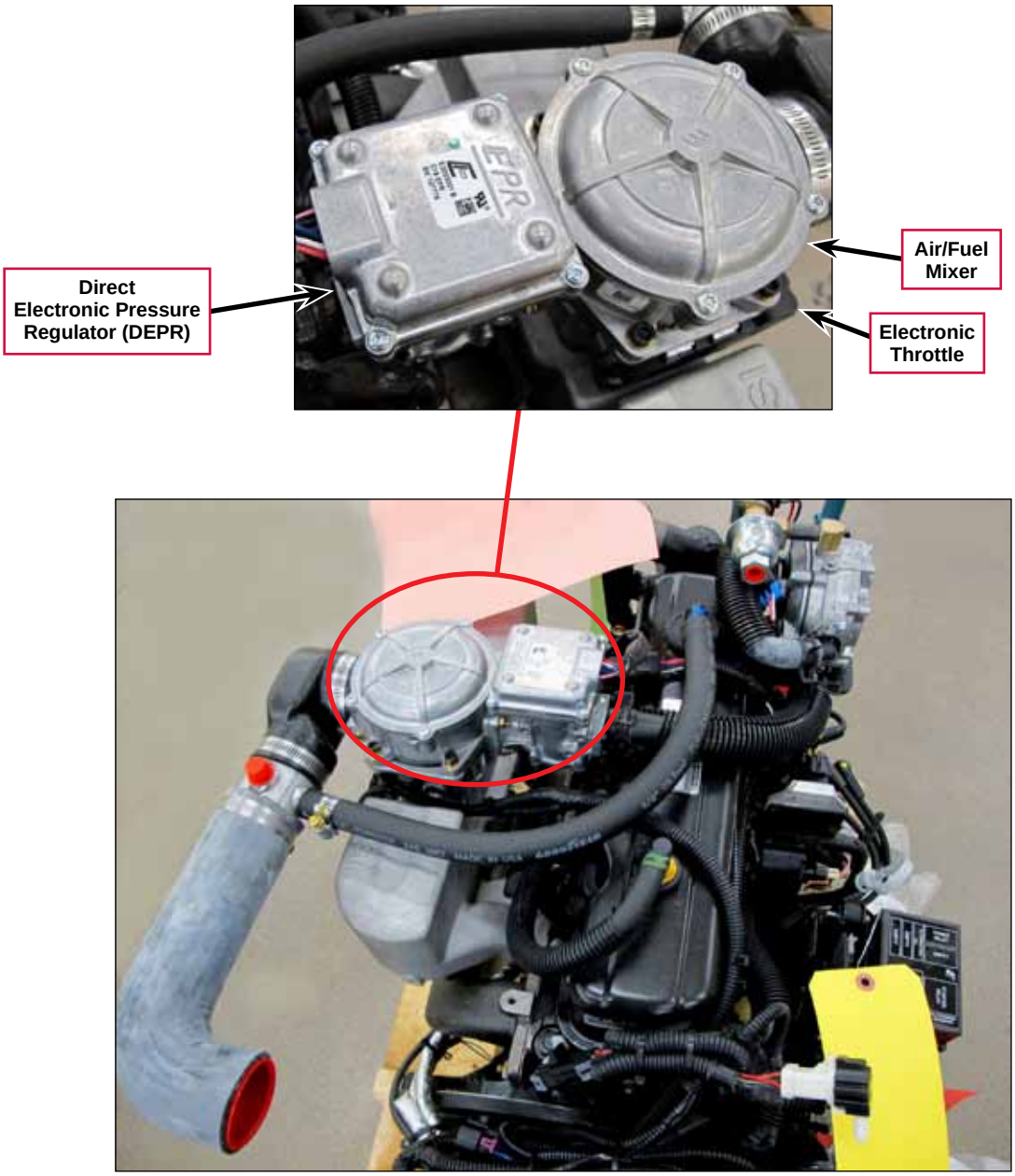

Gasoline

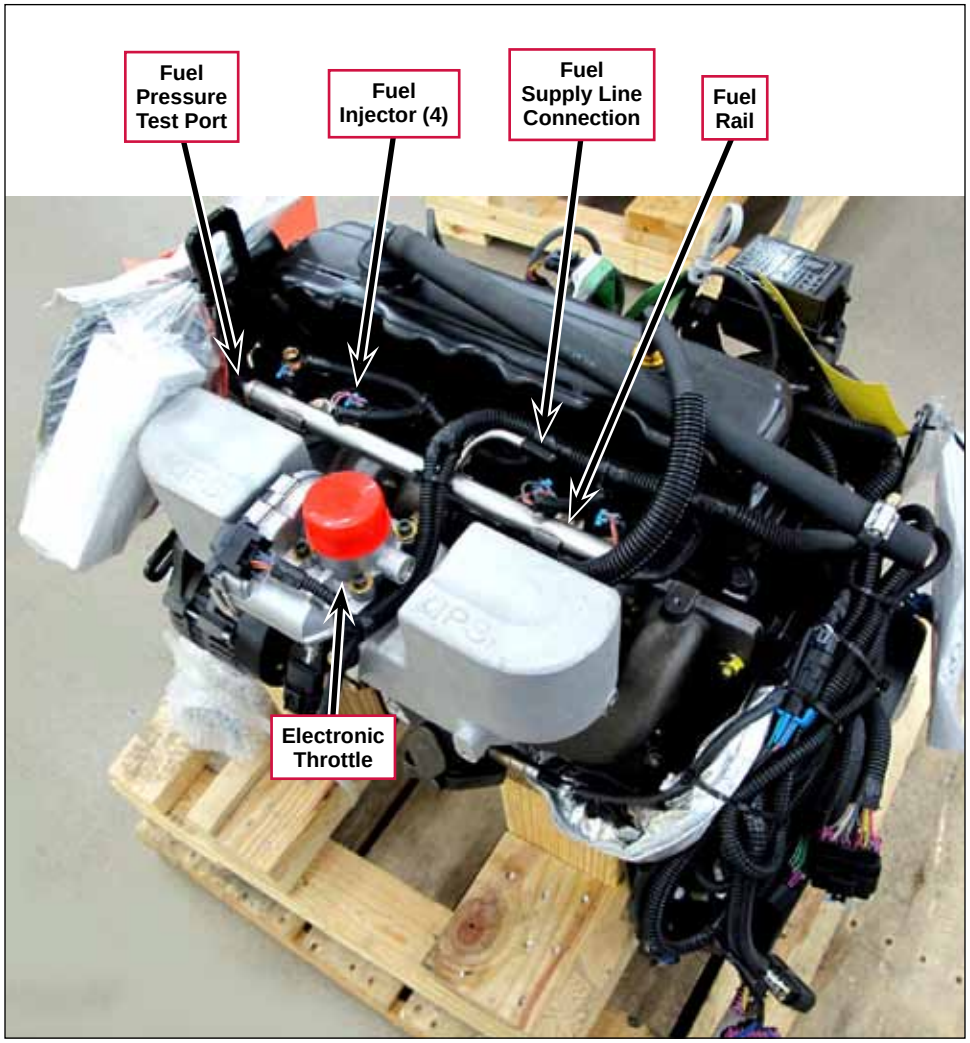
Fuel Pressure Test Port
Fuel Injector (4)
Fuel Supply Line Connection
Fuel Rail
Electronic Throttle

Firing Order and Plug Wire Routing

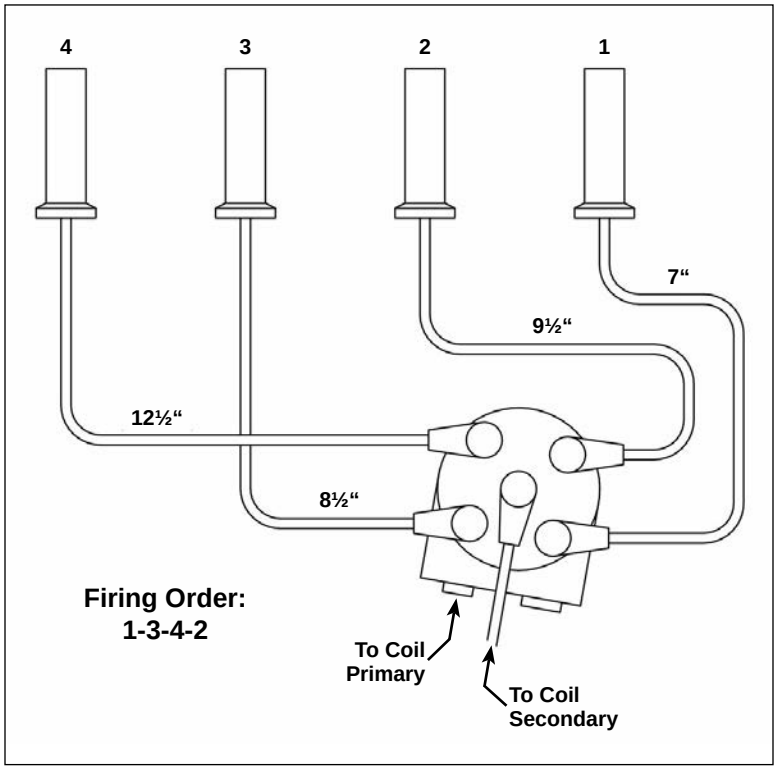

Maintenance and Adjustments

Warning! Before performing any machine maintenance or adjustments, make sure the key switch is off, the key is removed from the machine and the parking brake is engaged.

Engine Oil

Check the engine oil level when the machine is parked on a level surface and the engine is cool. Change the engine oil after the first 35 hours of operation and every 150 hours after that. Use any SF or SG rated oil meeting API specifications and suited to seasonal temperatures. Refer to the engine manufacturer’s service manuals for oil capacities and additional engine specifications. Replace the oil filter with every oil change.

Temperature Range	Oil Weight
Above 60° F (15° C)	SAE 10W-30
Below 60° F (15° C)	SAE 5W-30

Engine Coolant

Checking Engine Coolant

Caution! Do not remove the radiator cap when the engine is hot.

To check the engine coolant level, open the engine cover and observe the coolant level in the coolant overflow tank. If the level is low, add a 50/50 mix of water and the recommended type antifreeze. Clean the radiator and oil cooler exteriors every 150 hours by washing with low-pressure water or using compressed air.

Service Note: *The oil cooler tips out for easy cleaning.*

Replacing Engine Coolant

One possible cause of engine overheating is trapped air in the cooling system. It's recommended that you use a Cooling System Tool when changing the engine coolant. The Cooling System Tool pulls a vacuum on the cooling system prior to filling to prevent air from being trapped in the cooling system.

Note that there are several types of Cooling System Tools. The following instructions describe how to use a typical type of tool. Refer to the operating instructions included with your particular tool if different than the example shown here.

1. Connect a **Compressed Air Supply Line** to the fitting on the Cooling System Tool.
2. Connect the **Coolant Supply Line** to the Cooling System Tool. Make sure the **Coolant Valve** is closed.
3. Insert and hold the Cooling System Tool onto the radiator filler neck, then press the **Air Switch**. The compressed air travelling through the **Venturi Tube Assembly** will pull a vacuum on the cooling system to remove air from the system.
4. Once the vacuum reading on the **Gauge** reaches approximately 25 on the green scale, release the **Air Switch**. Note that this also a good opportunity to check for cooling system leaks,

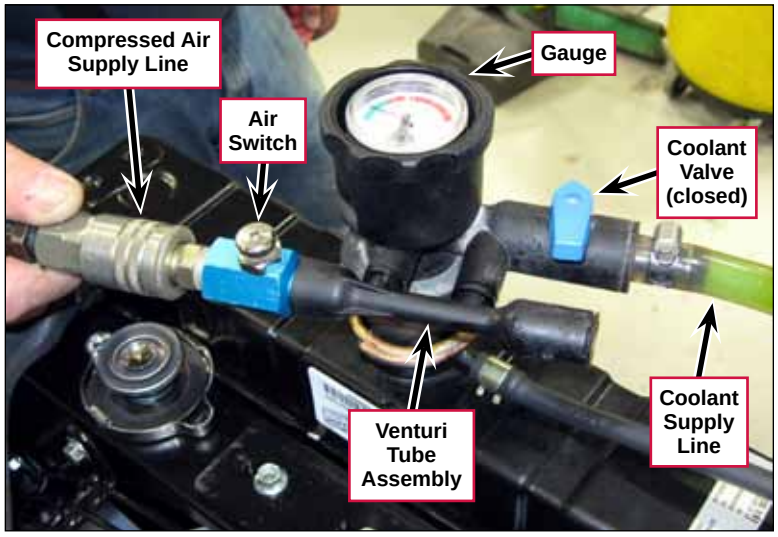

Removing the Air from the Cooling System with Cooling System Tool

5. Continue to hold the Cooling System Tool onto the radiator filler neck and open the **Coolant Valve** to allow coolant to flow into the radiator.
6. Once the pressure on the **Gauge** reaches approximately 5 on the red scale and the radiator is almost full, shut off the **Coolant Valve** and remove the Cooling System Tool from the radiator filler neck.
7. Top off the radiator and overflow tank as necessary.

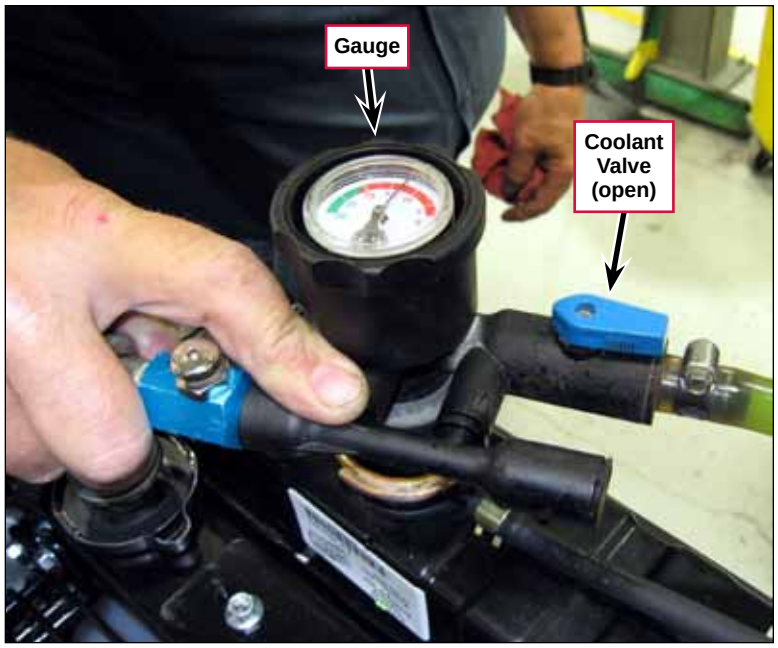

Filling Cooling System with Coolant

Engine Air Filter Maintenance

Caution! ***When servicing the engine air filter elements, use extreme care to prevent loose dust from entering the engine. Dust can severely damage the engine.***

Service the air cleaner more frequently under severe dusty or dirty conditions.

1. Remove the primary air cleaner element from the air cleaner assembly and inspect the element for foreign material restrictions or signs of excessive wear or damage. Replace the element if necessary.
2. Remove all dust and foreign matter from the air cleaner housing.
3. Reinstall the air cleaner element.
4. Reinstall the air cleaner cup, then securely fasten the retaining clips

Troubleshooting

Note: *Also refer to the* PSI Tier 3 Certified Mobile Diagnostic and Troubleshooting Manual, *publication number* PSITIER3 - G, *for additional troubleshooting information and procedures.*

General Troubleshooting

Problem	Cause	Correction
The engine will not crank.	No power to pin K on the 14-pin Engine Harness Connector.	• Check circuit breaker CB3 and reset if necessary. • Check the continuity from the Ignition Switch to pin K on the 14-pin Engine Harness Connector and repair as necessary.
The engine will not start.	No power to pin A on the 14-pin Engine Harness Connector.	• Check circuit breaker CB4 and reset if necessary. • Check the continuity from the Ignition Switch to pin A on the 14-pin Engine Harness Connector and repair as necessary.
Engine will not run at high speed (2000 RPM)	Loss of run signal from the Throttle Switch.	• Check that a voltage signal is being sent to the engine control when the Throttle Switch is set to operating speed. • Check the continuity through the Throttle Switch and connections and repair as necessary.
The engine stops running, check engine light is on.	The coolant temperature is too high.	Refer to the ***Engine Overheating Problems*** section below.
	The oil pressure has dropped below 6 psi @1000 RPM or 18 psi @ 2000 RPM.	Refer to the ***Loss of Oil Pressure Protection*** section below.

Engine Overheating Problems

Use the checklist below as a guide to thoroughly check the engine cooling system.

- Check the coolant level in the overflow tank and radiator.
- Inspect and clean the radiator and hydraulic oil cooler.
- Check for correct operation of the belt-driven engine cooling fan (slippage).
- Check to see that the engine thermostat opens.
- Check for correct water pump operation.
- Check the engine crankcase oil level.
- Check for air trapped in the cooling system. (Refer to the ***Engine Coolant/Replacing Engine Coolant*** section.)
- Check the water temperature switch for correct function as replace if necessary.

Loss of Oil Pressure Protection

The engine will shut down if the oil pressure drops below 6 psi at 1000 RPM, or below 18 psi at 2000 RPM. Check for possible causes for low oil pressure such as:

- Engine crankcase level is low.
- Incorrect oil viscosity.
- Fault in oil pressure switch.
- Excessive engine wear or defective internal oil pump (relief valve)

Engine Diagnostics

To Access the Engine Diagnostic Information Using the Controller Interface Kit and a PC

The Diagnostic Communications Cable and Software Kit (p/n 56305647) allows you to connect a laptop PC to the engine to view the various engine parameters, configuration settings and error codes, and displays the engine software and hardware information.

Note that this is the preferred way to view the engine diagnostic information. To use the Controller Interface Kit:

1. Install the software from the provided CD onto your PC.
2. Connect the USB connector on the kit cable to a USB port in your PC.

Diagnostic Communication Cable and software, p/n 56305647

3. Remove the **Protective Cap**, then connect the kit cable to the **Communication Port** on the engine.

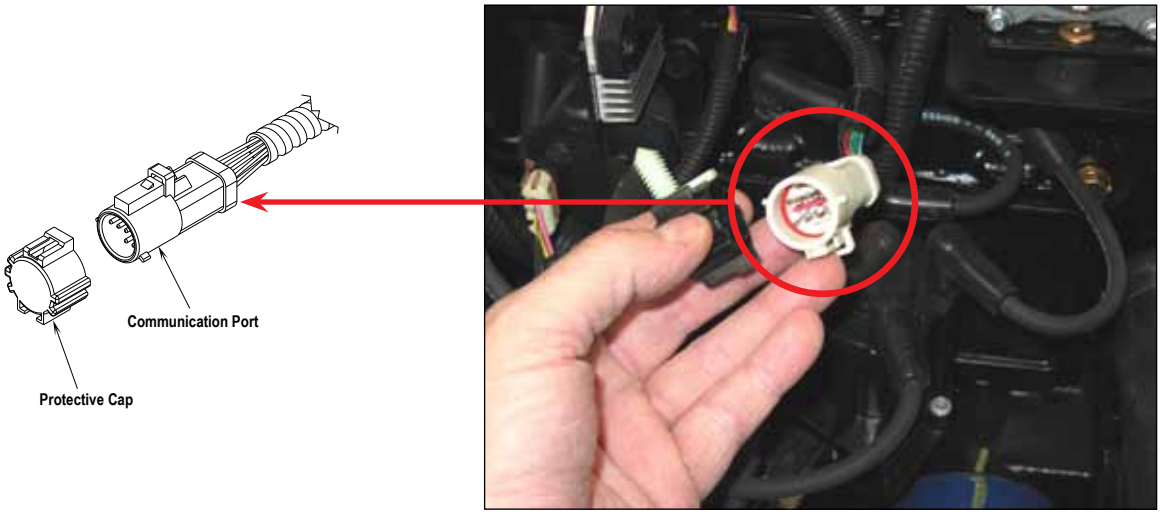

Note that the minimum system requirements for the software in the Diagnostic Communications Cable and Software Kit are as follows:

- Windows® XP, 2000 or 98SE (Second Edition) operating system
- Minimum processor speed – Pentium® II 450 MHz
- Minimum RAM requirements:
  - Windows® XP – 256 MB
  - Windows® 2000 – 128 MB
  - Windows® 98SE – 128 MB
- At least one available RS232 serial or USB port. Note that the USB driver does not support Windows 98 SE.

To Access the Engine DTC Error Codes Manually

You can access the engine DTC (diagnostic test code) error codes manually without using a Controller Interface Kit and PC. The codes will be shown through a sequence of blinks on the **Check Engine Light** (also referred to as the malfunction indicator lamp or MIL).

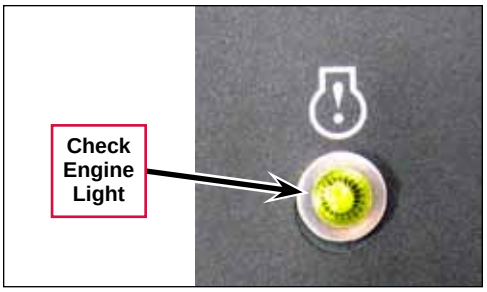

To access the codes:

1. Remove the **Protective Cap** from the **Communication Port** on the engine.
2. Use a wire to jumper **Pin #1** to **Pin #4** as shown.

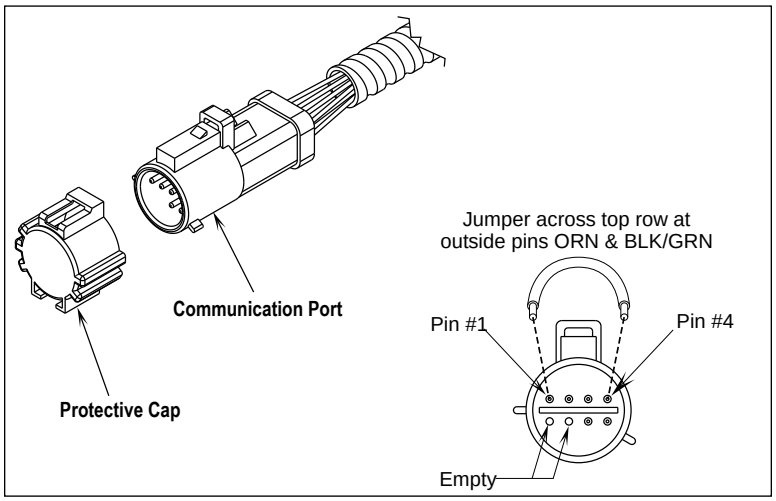

3. Turn the key switch to the on position. You can now read the error codes by observing the blinks on the **Check Engine Light**. Be ready to write down any codes that may be stored.

Note: *The light will always blink "1-6-5-4" three times at the beginning and at the end of the error code number display series.*

For example, error code "116", indicating an ECT (engine coolant temperature) high-voltage condition, would be indicated as follows:

a. The light will show one blink, a short pause, six blinks, a short pause, five blinks, a short pause, then four blinks. Note that this 1-6-5-4 sequence is not an error code, but will be repeated three times to indicate the beginning of the error code number display series.

b. The light will show the first actual error code (116 in this example) with one blink, a short pause, one blink, a short pause, then six blinks. This 1-1-6 sequence will be repeated three times, then the light will blink the next error code number sequence in the series (if present).

- If no DTC codes are found, the **Check Engine Light** will continue to flash the 1-6-5-4 sequence only.
- If one of the numbers in the DTC code is zero (0), the zero will be represented as a short pause (no flash).

c. When all of the error code number sequences have been displayed, the light will blink the 1-6-5-4 sequence three times again to indicate the end of the error code number series.

d. The light will then repeat steps a through c above.

Diagnostic Trouble Code (DTC) Chart – Sorted by DTC Number

Description	DTC Set 2 SPN-2	DTC Set 2 FMI-2	Description	DTC Set 2 SPN-2	DTC Set 2 FMI-2
DTC 11: Intake cam / distributor position error	520800	7	DTC 268: Injector 3 coil shorted	653	6
DTC 16: Crank and/or cam could not synchronize during start	636	8	DTC 270: Injector 4 open or short to ground	654	5
DTC 24: Exhaust cam position error	520801	7	DTC 271: Injector 4 coil shorted	654	6
DTC 87 Fuel pressure lower than expected	94	1	DTC 273: Injector 5 open or short to ground	655	5
DTC 88 Fuel pressure higher than expected	94	0	DTC 274: Injector 5 coil shorted	655	6
DTC 91: FP low voltage	94	4	DTC 276: Injector 6 open or short to ground	656	5
DTC 92: FP high voltage	94	3	DTC 277: Injector 6 coil shorted	656	6
DTC 107: MAP voltage low	106	4	DTC 279: Injector 7 open or short to ground	657	5
DTC 108: MAP pressure high	106	16	DTC 280: Injector 7 coil shorted	657	6
DTC 111: IAT higher than expected stage 1	105	15	DTC 282: Injector 8 open or short to ground	658	5
DTC 112: IAT voltage low	105	4	DTC 283: Injector 8 coil shorted	658	6
DTC 113: IAT voltage high	105	3	DTC 285: Injector 9 open or short to ground	659	5
DTC 116: ECT higher than expected stage 1	110	15	DTC 286: Injector 9 coil shorted	659	6
DTC 117: ECT voltage low	110	4	DTC 288: Injector 10 open or short to ground	660	5
DTC 118: ECT voltage high	110	3	DTC 289: Injector 10 coil shorted	660	6
DTC 121: TPS1-2 lower than expected	51	1	DTC 1631: PWM1-Gauge1 open / ground short	697	5
DTC 122: TPS1 voltage low	51	4	DTC 299: Boost control underboost failure	1692	1
DTC 123: TPS1 voltage high	51	3	DTC 301: Cylinder 1 emissions/catalyst damaging misfire	1323	31
DTC 127: IAT higher than expected stage 2	105	0	DTC 302: Cylinder 2 emissions/catalyst damaging misfire	1324	31
DTC 129: BP pressure low	108	1	DTC 303: Cylinder 3 emissions/catalyst damaging misfire	1325	31
DTC 134: EGO1 open / lazy	724	10	DTC 304: Cylinder 4 emissions/catalyst damaging misfire	1326	31
DTC 140: EGO3 open / lazy	520209	10	DTC 305: Cylinder 5 emissions/catalyst damaging misfire	1327	31
DTC 154: EGO2 open / lazy	520208	10	DTC 306: Cylinder 6 emissions/catalyst damaging misfire	1328	31
DTC 160: EGO4 open / lazy	520210	10	DTC 307: Cylinder 7 emissions/catalyst damaging misfire	1329	31
DTC 171: Adaptive-learn gasoline bank1 high	520200	0	DTC 308: Cylinder 8 emissions/catalyst damaging misfire	1330	31
DTC 172: Adaptive-learn gasoline bank1 low	520200	1	DTC 326: Knock1 excessive or erratic signal	731	2
DTC 174: Adaptive-learn gasoline bank2 high	520201	0	DTC 327: Knock1 sensor open or not present	731	4
DTC 175: Adaptive-learn gasoline bank2 low	520201	1	DTC 331: Knock2 excessive or erratic signal	520241	2
DTC 182: FT low voltage	174	4	DTC 332: Knock2 sensor open or not present	520241	4
DTC 183: FT high voltage	174	3	DTC 336: CRANK input signal noise	636	2
DTC 187: Gaseous fuel temperature sender low voltage	520240	4	DTC 337: Crank signal loss	636	4
DTC 188: Gaseous fuel temperature sender high voltage	520240	3	DTC 341: CAM input signal noise	723	2
DTC 217: ECT higher than expected stage 2	110	0	DTC 342: Loss of CAM input signal	723	4
DTC 219: RPM higher than max allowed govern speed	515	15	DTC 359: Fuel run-out longer than expected	1239	7
DTC 221: TPS1-2 higher than expected	51	0	DTC 420: Catalyst inactive on gasoline (Bank 1)	520211	10
DTC 222: TPS2 voltage low	520251	4	DTC 430: Catalyst inactive on gasoline (Bank 2)	520212	10
DTC 223: TPS2 voltage high	520251	3	DTC 502: Roadspeed input loss of signal	84	1
DTC 234: Boost control overboost failure	1692	0	DTC 508: IAC ground short	520252	6
DTC 236: TIP active	1692	2	DTC 509: IAC coil open/short	520252	5
DTC 237: TIP low voltage	1127	4	DTC 520: Oil pressure sender low pressure stage 1	100	18
DTC 238: TIP high voltage	1127	3	DTC 521: Oil pressure sender high pressure	100	0
DTC 261: Injector 1 open or short to ground	651	5	DTC 522: Oil pressure sender low voltage	100	4
DTC 262: Injector 1 coil shorted	651	6	DTC 523: Oil pressure sender high voltage	100	3
DTC 264: Injector 2 open or short to ground	652	5	DTC 524: Oil pressure low	100	1
DTC 265: Injector 2 coil shorted	652	6	DTC 562: Vbat voltage low	168	17
DTC 267: Injector 3 open or short to ground	653	5	DTC 563: Vbat voltage high	168	15

Description	DTC Set 2 SPN-2	DTC Set 2 FMI-2	Description	DTC Set 2 SPN-2	DTC Set 2 FMI-2
DTC 601: Microprocessor failure - FLASH	628	13	DTC 1175: MegaJector voltage supply low	520260	4
DTC 604: Microprocessor failure - RAM	630	12	DTC 1176: MegaJector internal actuator fault detection	520260	12
DTC 606: Microprocessor failure - COP	629	31	DTC 1177: MegaJector internal circuitry fault detection	520260	12
DTC 615: Start relay coil open	1321	5	DTC 1178: MegaJector internal comm fault detection	520260	12
DTC 616: Start relay ground short	1321	4	DTC 1182: Fuel impurity level high	520401	0
DTC 617: Start relay coil short to power	1321	3	DTC 1183: MegaJector autozero / lockoff failure	520803	31
DTC 627: Fuel pump relay coil open	1348	5	DTC 1311: Cylinder 1 misfire detected	1323	11
DTC 628: Fuel-pump high-side open or short to ground	1347	5	DTC 1312: Cylinder 2 misfire detected	1324	11
DTC 628: Fuel pump relay control ground short	1348	4	DTC 1313: Cylinder 3 misfire detected	1325	11
DTC 629: Fuel-pump high-side short to power	1347	6	DTC 1314: Cylinder 4 misfire detected	1326	11
DTC 629: Fuel pump relay coil short to power	1348	3	DTC 1315: Cylinder 5 misfire detected	1327	11
DTC 642: Sensor supply voltage 1 low	1079	4	DTC 1316: Cylinder 6 misfire detected	1328	11
DTC 643: Sensor supply voltage 1 high	1079	3	DTC 1317: Cylinder 7 misfire detected	1329	11
DTC 650: MIL open	1213	5	DTC 1318: Cylinder 8 misfire detected	1330	11
DTC 652: Sensor supply voltage 2 low	1080	4	DTC 1411: EMWT1 voltage high	441	3
DTC 653: Sensor supply voltage 2 high	1080	3	DTC 1412: EMWT2 voltage high	442	3
DTC 685: Power relay coil open	1485	5	DTC 1413: EMWT1 voltage low	441	4
DTC 686: Power relay ground short	1485	4	DTC 1414: EMWT2 voltage low	442	4
DTC 687: Power relay coil short to power	1485	3	DTC 1415: EMWT1 higher than expected stage 1	441	15
DTC 916: Shift actuator feedback out-of-range	520226	3	DTC 1416: EMWT2 higher than expected stage 1	442	15
DTC 919: Shift unable to reach desired gear	520226	7	DTC 1417: EMWT1 higher than expected stage 2	441	0
DTC 920: Shift actuator or drive circuit failed	520226	31	DTC 1418: EMWT2 higher than expected stage 2	442	0
DTC 1111: RPM above fuel rev limit level	515	16	DTC 1419: ERWT1 voltage high	443	3
DTC 1112: RPM above spark rev limit level	515	0	DTC 1420: ERWT2 voltage high	444	3
DTC 1121: FPP1/2 simultaneous voltages out-of-range (redundan	91	31	DTC 1421: ERWT1 voltage low	443	4
DTC 1122: FPP1/2 do not match each other or IVS (redundancy lo	520250	31	DTC 1422: ERWT2 voltage low	444	4
DTC 1131: WGP voltage high	1192	3	DTC 1423: ERWT1 higher than expected stage 1	443	15
DTC 1132: WGP voltage low	1192	4	DTC 1424: ERWT2 higher than expected stage 1	444	15
DTC 1151: Closed-loop LPG high	520206	0	DTC 1425: ERWT1 higher than expected stage 2	443	0
DTC 1152: Closed-loop LPG low	520206	1	DTC 1426: ERWT2 higher than expected stage 2	444	0
DTC 1153: Closed-loop NG high	520207	0	DTC 1511: AUX analog Pull-Up 1 high voltage	520216	3
DTC 1154: Closed-loop NG low	520207	1	DTC 1512: AUX analog Pull-Up 1 low voltage	520216	4
DTC 1155: Closed-loop gasoline bank1 high	520204	0	DTC 1513: AUX analog Pull-Up 2 high voltage	520217	3
DTC 1156: Closed-loop gasoline bank1 low	520204	1	DTC 1514: AUX analog Pull-Up 2 low voltage	520217	4
DTC 1157: Closed-loop gasoline bank2 high	520205	0	DTC 1515: AUX analog Pull-Down 1 high voltage	520215	3
DTC 1158: Closed-loop gasoline bank2 low	520205	1	DTC 1516: AUX analog Pull-Down 1 low voltage	520215	4
DTC 1161: Adaptive-learn LPG high	520202	0	DTC 1517: AUX analog Pull-Up 3 high voltage	520218	3
DTC 1162: Adaptive-learn LPG low	520202	1	DTC 1518: AUX analog Pull-Up 3 low voltage	520218	4
DTC 1163: Adaptive-learn NG high	520203	0	DTC 1521: CHT higher than expected stage 1	110	16
DTC 1164: Adaptive-learn NG low	520203	1	DTC 1522: CHT higher than expected stage 2	110	0
DTC 1165: Catalyst inactive on LPG	520213	10	DTC 1531: Gov1/2/3 interlock failure	520270	31
DTC 1166: Catalyst inactive on NG	520214	10	DTC 1541: AUX analog Pull-Up/Down 1 high voltage	520219	3
DTC 1171: MegaJector delivery pressure higher than expected	520260	0	DTC 1542: AUX analog Pull-Up/Down 1 low voltage	520219	4
DTC 1172: MegaJector delivery pressure lower than expected	520260	1	DTC 1543: AUX analog Pull-Up/Down 2 high voltage	520220	3
DTC 1173: MegaJector comm lost	520260	31	DTC 1544: AUX analog Pull-Up/Down 2 low voltage	520220	4
DTC 1174: MegaJector voltage supply high	520260	3	DTC 1545: AUX analog Pull-Up/Down 3 high voltage	520221	3

Description	DTC Set 2 SPN-2	DTC Set 2 FMI-2	Description	DTC Set 2 SPN-2	DTC Set 2 FMI-2
DTC 1546: AUX analog Pull-Up/Down 3 low voltage	520221	4	DTC 1662: PWM6 short to power	925	3
DTC 1547: AUX analog Pull-Up/Down 4 high voltage	713	3	DTC 1663: PWM7 open / ground short	926	5
DTC 1548: AUX analog Pull-Up/Down 4 low voltage	713	4	DTC 1664: PWM7 short to power	926	3
DTC 1551: AUX digital 1 high voltage	520222	3	DTC 1665: PWM8 open / ground short	2646	5
DTC 1552: AUX digital 1 low voltage	520222	4	DTC 1666: PWM8 short to power	2646	3
DTC 1553: AUX digital 2 high voltage	520223	3	DTC 1669: PWM9 open / ground short	2647	5
DTC 1554: AUX digital 2 low voltage	520223	4	DTC 1670: PWM9 short to power	2647	3
DTC 1555: AUX digital 3 high voltage	520224	3	DTC 2111: Unable to reach lower TPS	51	7
DTC 1555: Water Intrusion Detection	520224	3	DTC 2112: Unable to reach higher TPS	51	7
DTC 1556: AUX digital 3 low voltage	520224	4	DTC 2115: FPP1 higher than IVS	91	0
DTC 1561: AUX analog Pull-Down 2 high voltage	0	3	DTC 2116: FPP2 higher than IVS	29	0
DTC 1561: AUX analog Pull-Down 3 high voltage	0	3	DTC 2120: FPP1 invalid voltage and FPP2 disagrees with IVS	520250	31
DTC 1561: AUX analog Pull-Down 2 low voltage	0	4	DTC 2121: FPP1-2 lower than expected	91	18
DTC 1561: AUX analog Pull-Down 3 low voltage	0	4	DTC 2122: FPP1 voltage high	91	3
DTC 1611: Sensor supply voltage 1 and 2 out-of-range	1079	31	DTC 2123: FPP1 voltage low	91	4
DTC 1612: Microprocessor failure - RTI 1	629	31	DTC 2125: FPP2 invalid voltage and FPP1 disagrees with IVS	520250	31
DTC 1613: Microprocessor failure - RTI 2	629	31	DTC 2126: FPP1-2 higher than expected	91	16
DTC 1614: Microprocessor failure - RTI 3	629	31	DTC 2127: FPP2 voltage low	29	4
DTC 1615: Microprocessor failure - A/D	629	31	DTC 2128: FPP2 voltage high	29	3
DTC 1616: Microprocessor failure - Interrupt	629	31	DTC 2130: IVS stuck at-idle, FPP1/2 match	558	5
DTC 1621: RS-485 Rx inactive	0	31	DTC 2131: IVS stuck off-idle, FPP1/2 match	558	6
DTC 1622: RS-485 Rx noise	0	31	DTC 2135: TPS1/2 simultaneous voltages out-of-range	51	31
DTC 1623: RS-485 Rx bad packet format	0	31	DTC 2139: FPP1 lower than IVS	91	1
DTC 1624: RS-485 remote shutdown request	0	31	DTC 2140: FPP2 lower than IVS	29	1
DTC 1625: J1939 shutdown request	1384	31	DTC 2229: BP pressure high	108	0
DTC 1626: CAN-J1939 Tx fault	639	12	DTC 2300: Spark coil 1 primary open or short to ground	1268	5
DTC 1627: CAN-J1939 Rx fault	639	12	DTC 2301: Spark coil 1 primary shorted	1268	6
DTC 1628: J1939 CAN address / engine-number conflict	639	13	DTC 2303: Spark coil 2 primary open or short to ground	1269	5
DTC 1629: J1939 TSC1 message receipt loss	639	9	DTC 2304: Spark coil 2 primary shorted	1269	6
DTC 1630: J1939 ETC message receipt loss	91	2	DTC 2306: Spark coil 3 primary open or short to ground	1270	5
DTC 1632: PWM1-Gauge1 short to power	697	6	DTC 2307: Spark coil 3 primary shorted	1270	6
DTC 1633: PWM2-Gauge2 open / ground short	698	5	DTC 2309: Spark coil 4 primary open or short to ground	1271	5
DTC 1634: PWM2-Gauge2 short to power	698	6	DTC 2310: Spark coil 4 primary shorted	1271	6
DTC 1635: PWM3-Gauge3 open / ground short	699	5	DTC 2312: Spark coil 5 primary open or short to ground	1272	5
DTC 1636: PWM3-Gauge3 short to power	699	6	DTC 2313: Spark coil 5 primary shorted	1272	6
DTC 1637: PWM4 open / ground short	700	5	DTC 2315: Spark coil 6 primary open or short to ground	1273	5
DTC 1638: PWM4 short to power	700	6	DTC 2316: Spark coil 6 primary shorted	1273	6
DTC 1639: PWM5 open / ground short	520230	5	DTC 2318: Spark coil 7 primary open or short to ground	1274	5
DTC 1640: PWM5 short to power	520230	6	DTC 2319: Spark coil 7 primary shorted	1274	6
DTC 1641: Buzzer control ground short	920	4	DTC 2321: Spark coil 8 primary open or short to ground	1275	5
DTC 1642: Buzzer open	920	5	DTC 2322: Spark coil 8 primary shorted	1275	6
DTC 1643: Buzzer control short to power	920	3	DTC 2324: Spark coil 9 primary open or short to ground	1276	5
DTC 1644: MIL control ground short	1213	4	DTC 2325: Spark coil 9 primary shorted	1276	6
DTC 1645: MIL control short to power	1213	3	DTC 2327: Spark coil 10 primary open or short to ground	1277	5
DTC 1651: J1939 ETC message receipt loss while in-gear	91	9	DTC 2328: Spark coil 10 primary shorted	1277	6
DTC 1661: PWM6 open / ground short	925	5	DTC 2428: EGT temperature high	173	0

Description	DTC Set 2	
	SPN-2	FMI-2
DTC 2618: Tach output ground short	645	4
DTC 2619: Tach output short to power	645	3
DTC 8901: UEGO microprocessor internal fault	3221	31
DTC 8902: UEGO heater supply high voltage	3222	3
DTC 8903: UEGO heater supply low voltage	3222	4
DTC 8904: UEGO cal resistor voltage high	3221	3
DTC 8905: UEGO cal resistor voltage low	3221	4
DTC 8906: UEGO return voltage shorted high	3056	3
DTC 8907: UEGO return voltage shorted low	3056	4
DTC 8908: UEGO pump voltage shorted high	3218	3
DTC 8909: UEGO pump voltage shorted low	3218	4
DTC 8910: UEGO sense cell voltage high	3217	3
DTC 8911: UEGO sense cell voltage low	3217	4
DTC 8912: UEGO pump voltage at high drive limit	3225	3
DTC 8913: UEGO pump voltage at low drive limit	3225	4
DTC 8914: UEGO sense cell slow to warm up	3222	10
DTC 8915: UEGO pump cell slow to warm up	3225	10
DTC 8916: UEGO sense cell impedance high	3222	0
DTC 8917: UEGO pump cell impedance high	3225	0
DTC 8918: UEGO pump cell impedance low	3225	1

Specifications

Engine Specifications

3.0 L GM		
Engine type		Vertical, liquid cooled, four-cylinder, push rod actuated overhead valve, solid-state distributor
Displacement		181 cubic inches (2966 cc)
Compression Ratio		9.2:1
Fuel	**Gasoline**	87 or 89 octane unleaded gasoline with no more than 10% ethanol by volume
	LP	33-lb. tank size with manual shutoff
Spark Plugs		AC Delco R45TS, gap .045” [1.14 mm]
Spark Plug Wiring		Match numbered coil position to spark plug number (see the ***Firing Order and Plug Wire Routing*** subsection)
Engine Firing Order		1-3-4-2
Ignition Timing		0 degrees BTDC
Engine Rotation		CCW (flywheel end)
Valve Lifters		Flat follower
Oil Capacity		4 qts. [3.79 L] without oil filter
		4.5 qts. [4.26 L] with oil filter
Oil Filter		PF-25 or equivalent
Minimum Oil Pressure (Hot)		6 psi [0.41 bar] @ 1000 RPM
		18 psi [1.24 bar] @ 2000 RPM
Cooling Capacity		4 qts. [3.79 L] without radiator
		12 qts. [11.36 L] with radiator

Special Tools

Diagnostic Communication Cable and software, p/n 56305647	
Cooling System Tool	

Hopper System

Functional Description

Overview

The hopper system holds the dust and debris swept up by the brooms.

There are two different hopper configurations; a manual dump (MD) hopper and a variable dump (VD) hopper.

- The manual dump hopper is fixed. A manual dump lever opens a hopper flap to empty the hopper onto the floor below the machine. Machines with a manual dump hopper do not have a dust control system.
- The variable dump hopper has a hydraulic cylinder that raises the hopper for emptying into a dumpster or other receptacle. A second hydraulic cylinder opens and closes the hopper dump door. Machines equipped with a variable dump hopper are also equipped with a dust control system. The dust control system includes a hopper filter, dust control motor and impeller, and filter shaker motor. Refer to the ***Dust Control System*** section for more information on the dust control components.

Hopper – Manual Dump Machines

The **Manual Dump Hopper** is fixed. Moving the **Hopper Dump Handle** to the **OPEN** position empties the contents of the **Manual Dump Hopper** onto the floor underneath the machine.

Note that there are no electrical or hydraulic components associated with the **Manual Dump Hopper**.

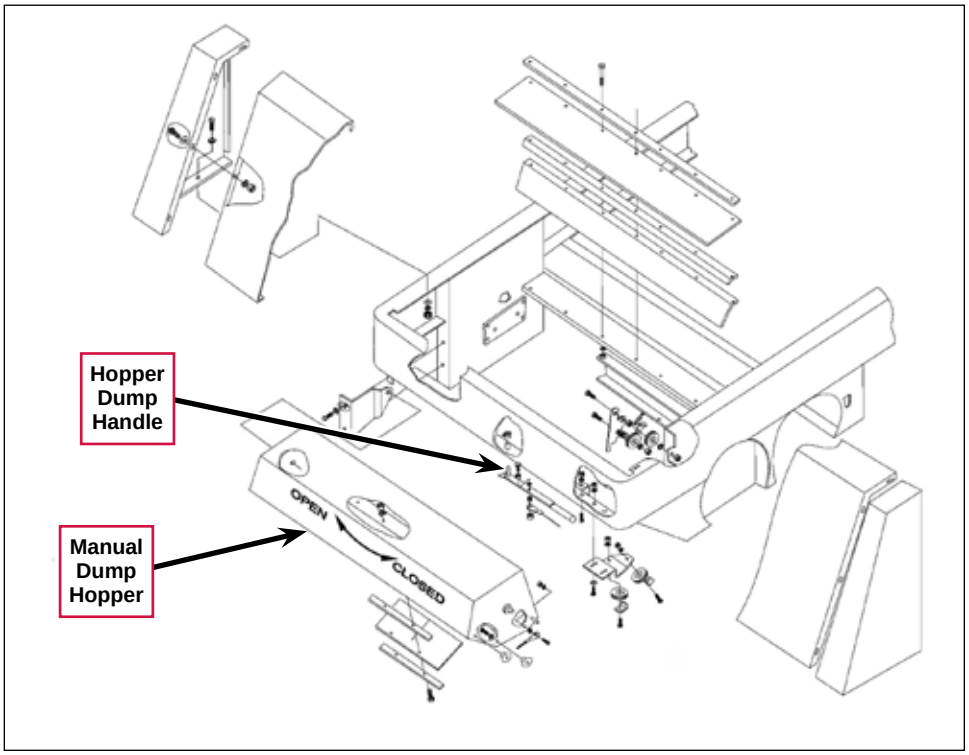

Hopper – Variable Dump Machines

The **Variable Dump Hopper** pivots on the **Rod** supported by the frame.

The **Hopper Lift Cylinder** swings the **Variable Dump Hopper** up to allow it to be emptied into a dumpster or other receptacle.

The **Hopper Dump Door Cylinder** opens and closes the **Hopper Dump Door**.

The **Hopper Switch** (called the "Hopper Down Switch" in the Parts List) closes when the **Variable Dump Hopper** is fully down.

The **Hopper Door Switch** (called the "Dump Door Switch" in the Parts List) closes when the **Hopper Dump Door** is closed.

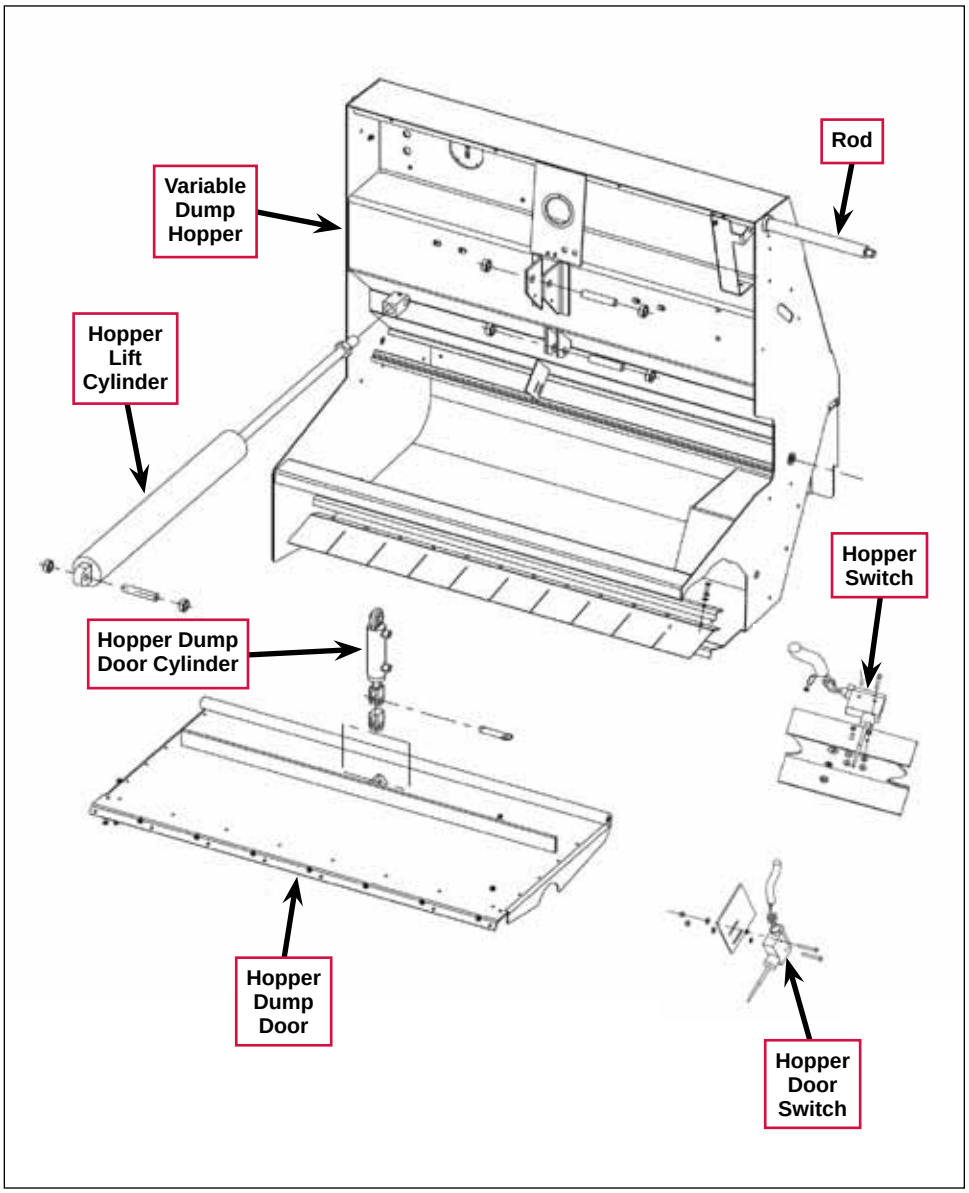

The hydraulic valves that control the **Hopper Lift Cylinder** and **Hopper Dump Cylinder** are mechanically actuated by the **Hopper Lift Lever** and the **Hopper Dump Door Lever** respectively. **Links** connect the **Hopper Lift Lever** and **Hopper Dump Door Lever** to the corresponding side of the **Hopper Control Valve**.

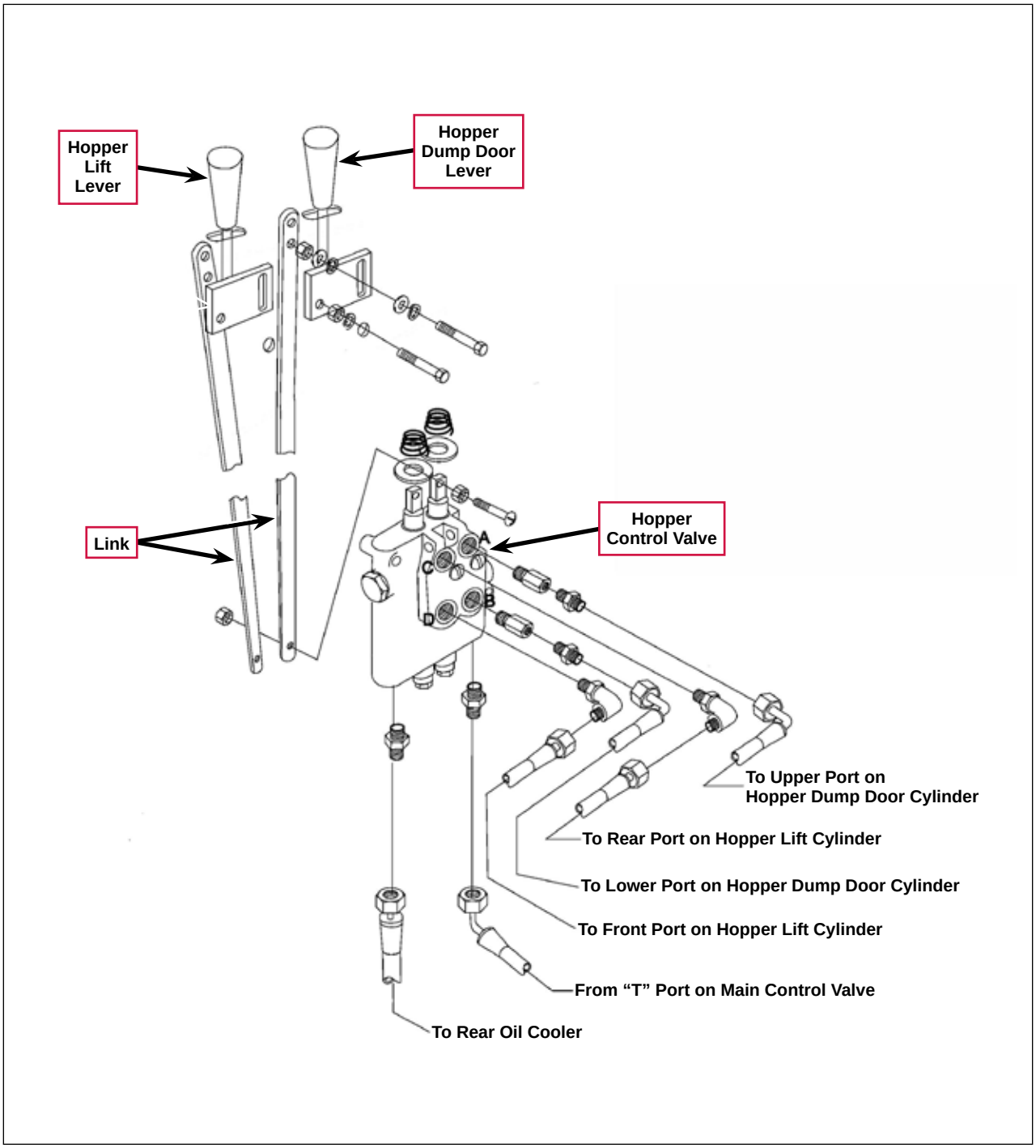

Hopper System Wiring Diagram – Variable Dump Machine

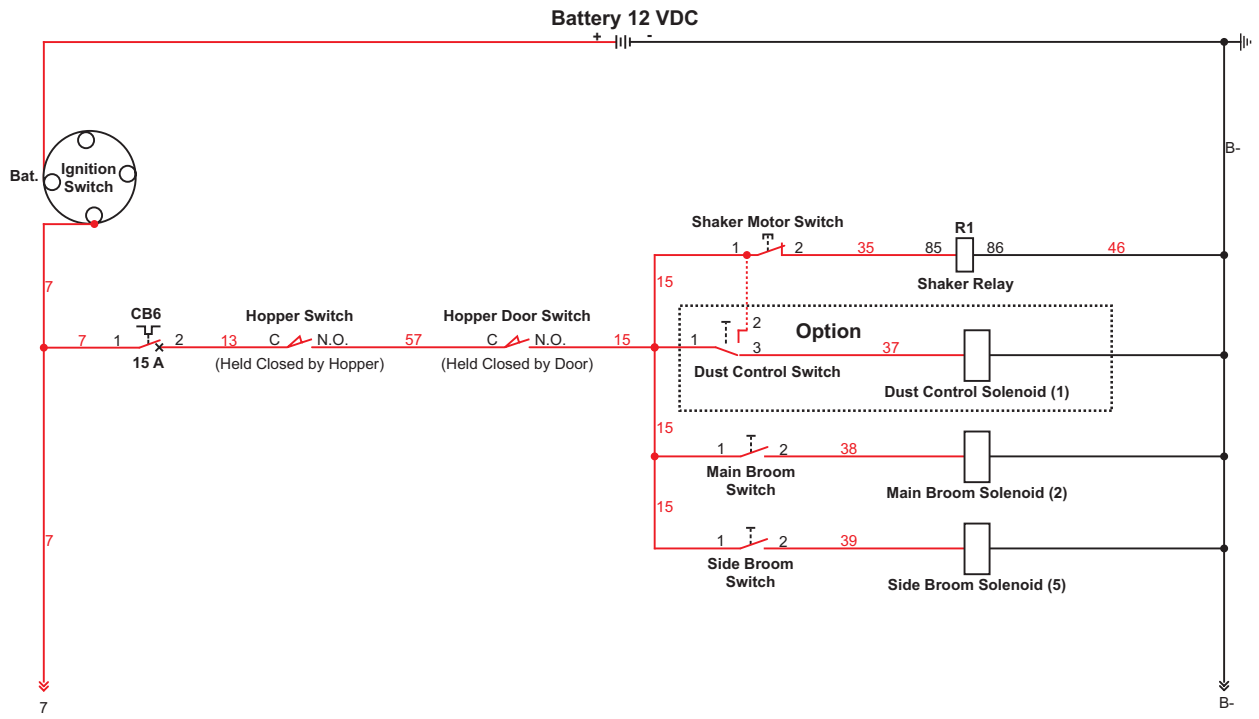

Electrical Circuit Description – Variable Dump Machine

The only electrical components associated with the hopper system are the **Hopper Switch** and the **Hopper Door Switch**. Both of these “whisker” switches must be closed in order to get positive voltage to the **Shaker Motor Switch**, **Dust Control Switch**, **Main Broom Switch** and **Side Broom Switch**.

Hopper System Hydraulic Diagrams – Variable Dump Machine

Hopper Control Valves in Neutral Position

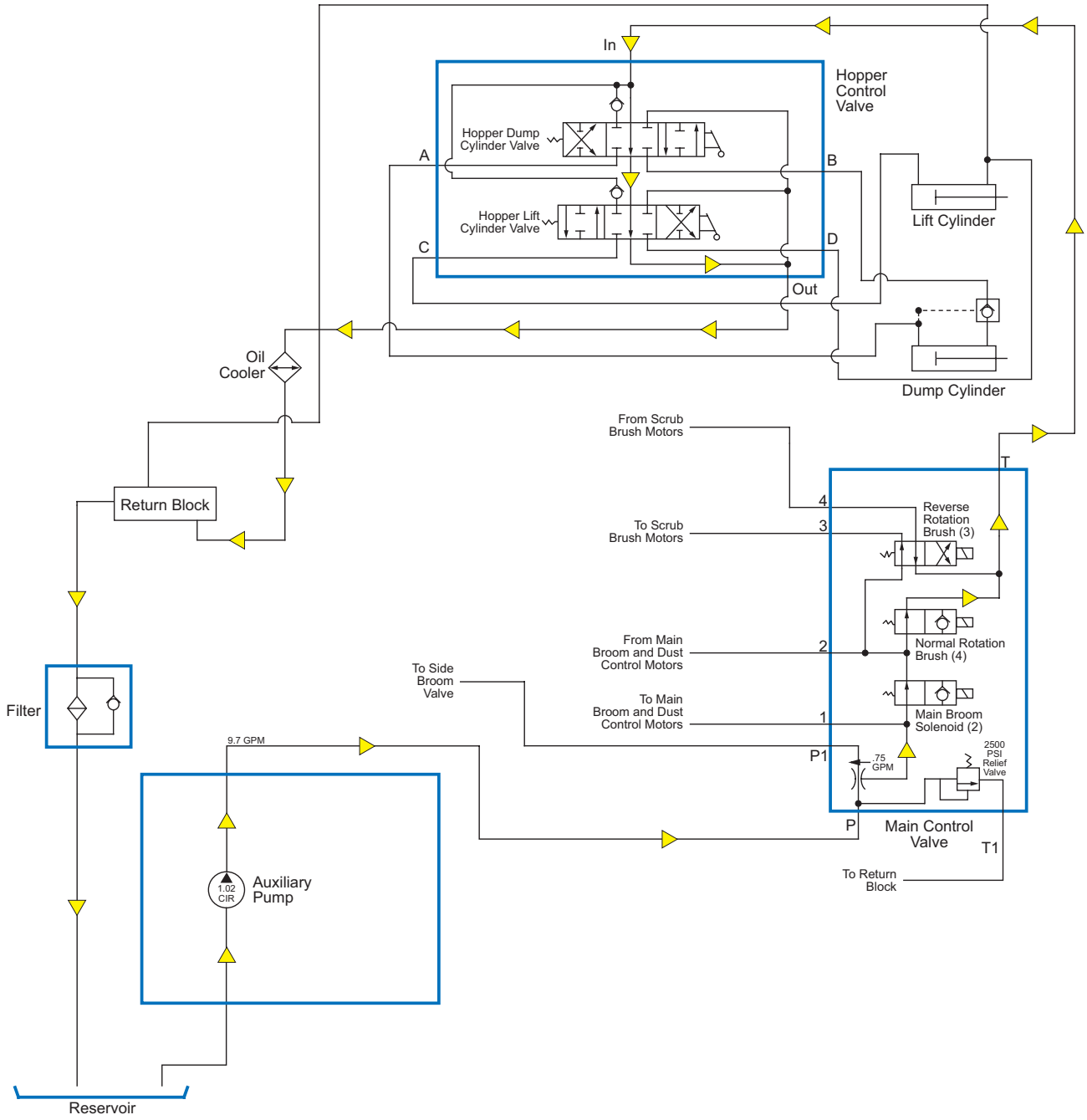

The hydraulic oil flows from the **Auxiliary Pump**, through non-priority leg of the priority flow divider, then through the **Main Control Valve** to the **Hopper Control Valve**. Note that the oil will take this path regardless of whether the **Main Broom**, **Dust Control** and **Scrub Brush Motors** are on or off.

When the **Hopper Dump Cylinder Valve** and **Hopper Lift Cylinder Valve** are in the neutral position, the oil flows through the **Hopper Control Valve**, then through the **Oil Cooler**, **Return Block** and **Filter** to the **Reservoir**. Note that the hydraulic lines from the **Dump Cylinder** and the bottom port on the **Lift Cylinder** are “deadheaded” in the **Hopper Control Valve** to hold the hopper and dump door in position.

Lift Hopper

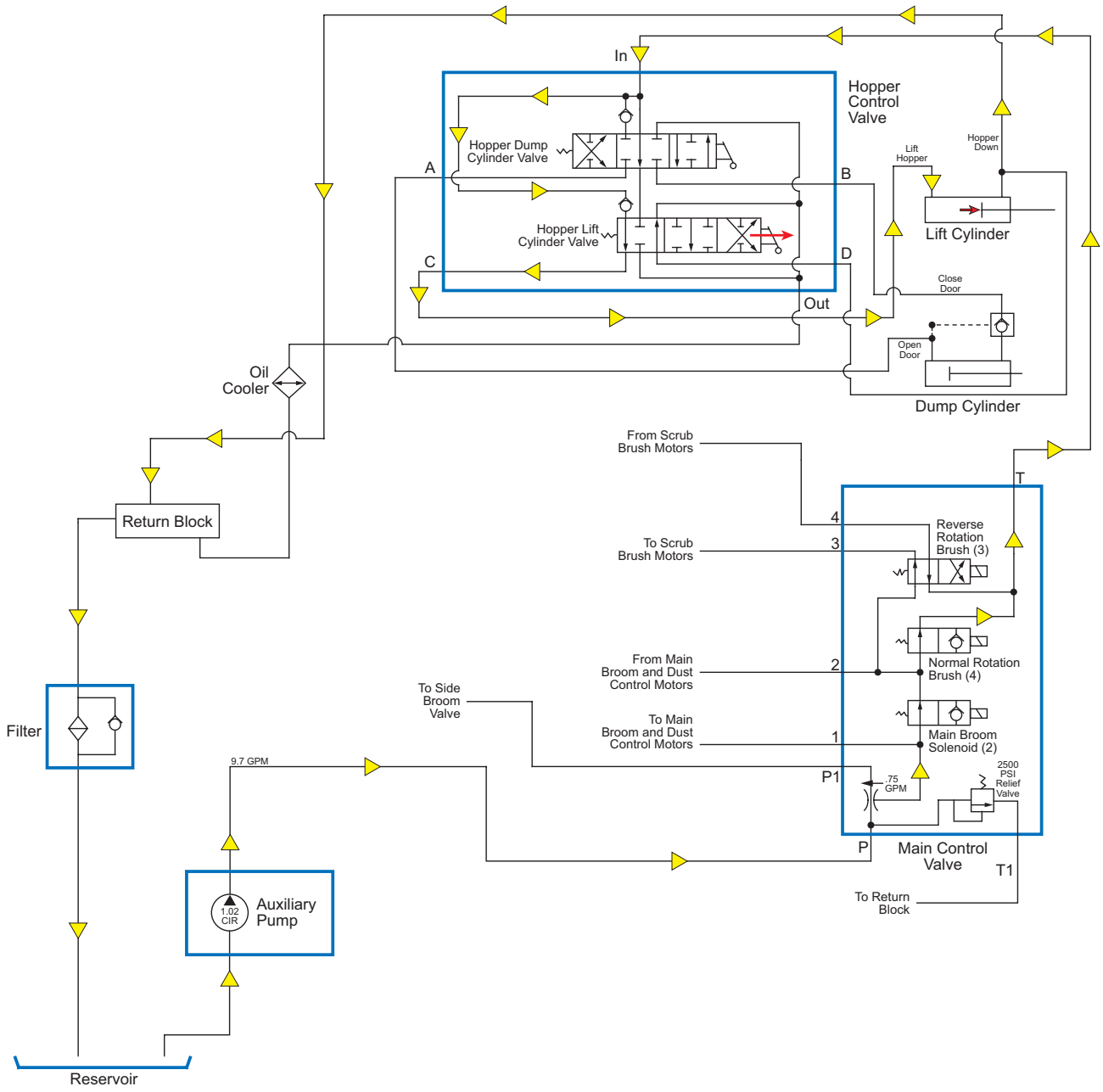

When the hopper lift lever is moved to the “raise” position, the oil flows through the check valve on the **Hopper Lift Cylinder Valve** and to the bottom port on the **Lift Cylinder** to raise the hopper. The oil from the top port on the **Lift Cylinder** goes to the return line to the **Filter** and **Reservoir**.

Lower Hopper

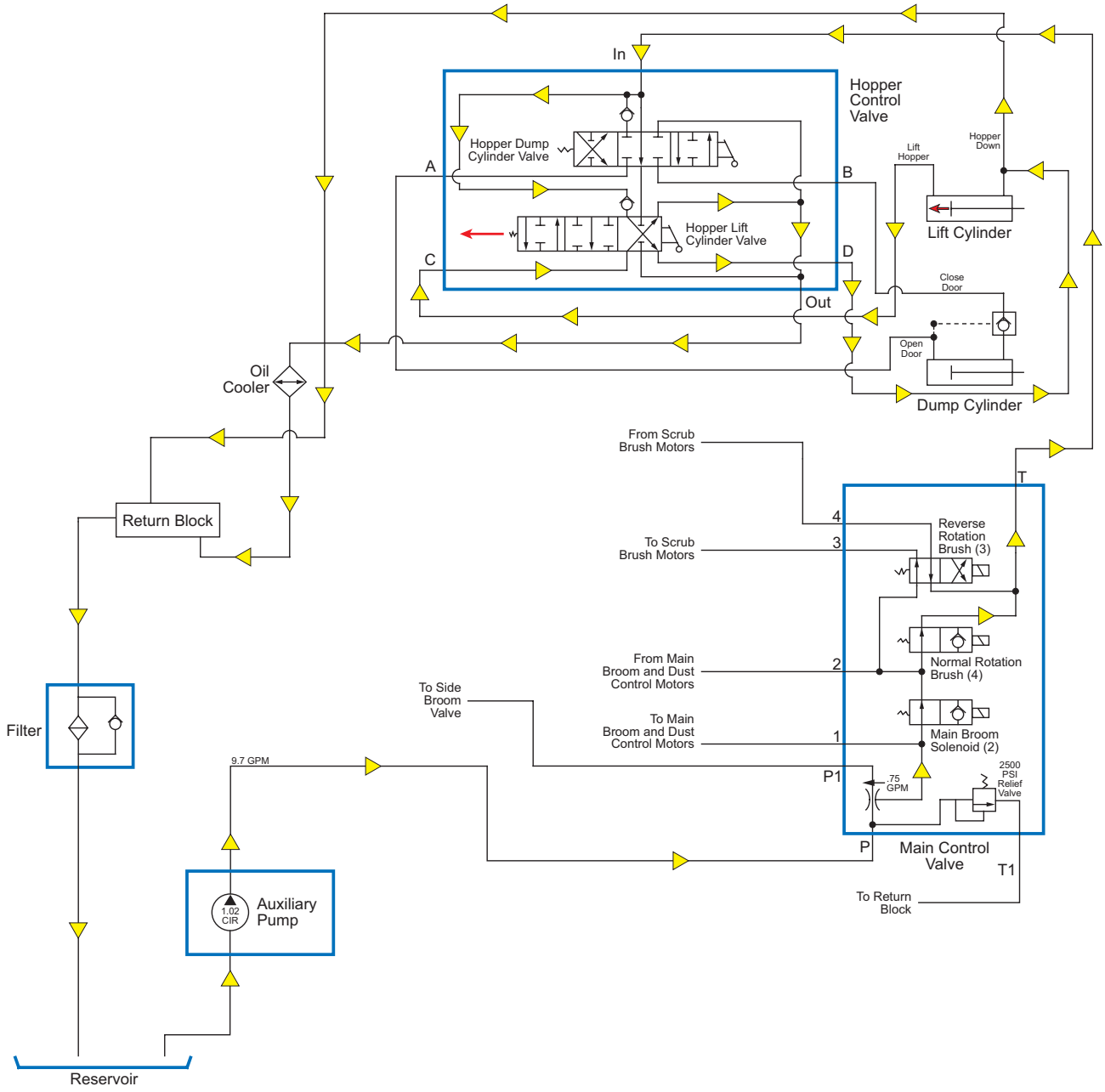

When the hopper lift lever is moved to the “lower” position, the **Hopper Lift Cylinder Valve** connects both ports on the **Lift Cylinder** to the return lines going to the **Reservoir**. This effectively creates equal pressure on both ends of the **Lift Cylinder** to allow the hopper to lower under its own weight.

Open Hopper Dump Door

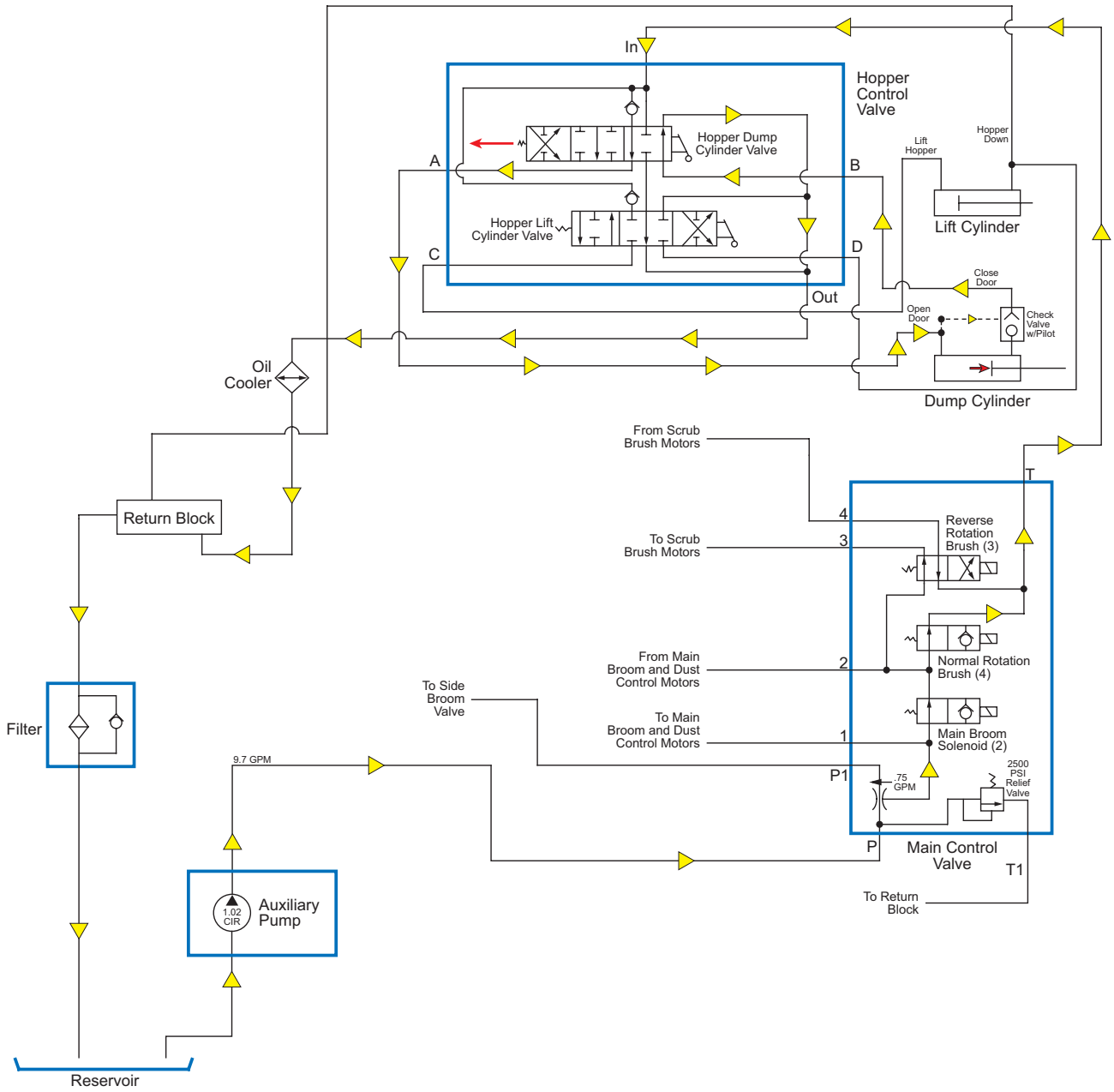

When the hopper dump door lever is moved to the “open” position, the oil flows through the check valve on the **Hopper Dump Cylinder Valve** and to the bottom port on the **Dump Cylinder** to open the hopper dump door. Note that the incoming oil pressure will open the **Pilot** on the **Check Valve** on the **Dump Cylinder** to allow oil to flow from the top port on the **Dump Cylinder**. The **Check Valve** keeps the hopper dump door closed until oil pressure is applied to the bottom port on the **Dump Cylinder** and to the **Pilot** on the **Check Valve**.

The oil from the top port on the **Dump Cylinder** flows back through the **Hopper Dump Cylinder Valve**, then to the return line to the **Oil Cooler**, **Filter** and **Reservoir**.

Close Hopper Dump Door

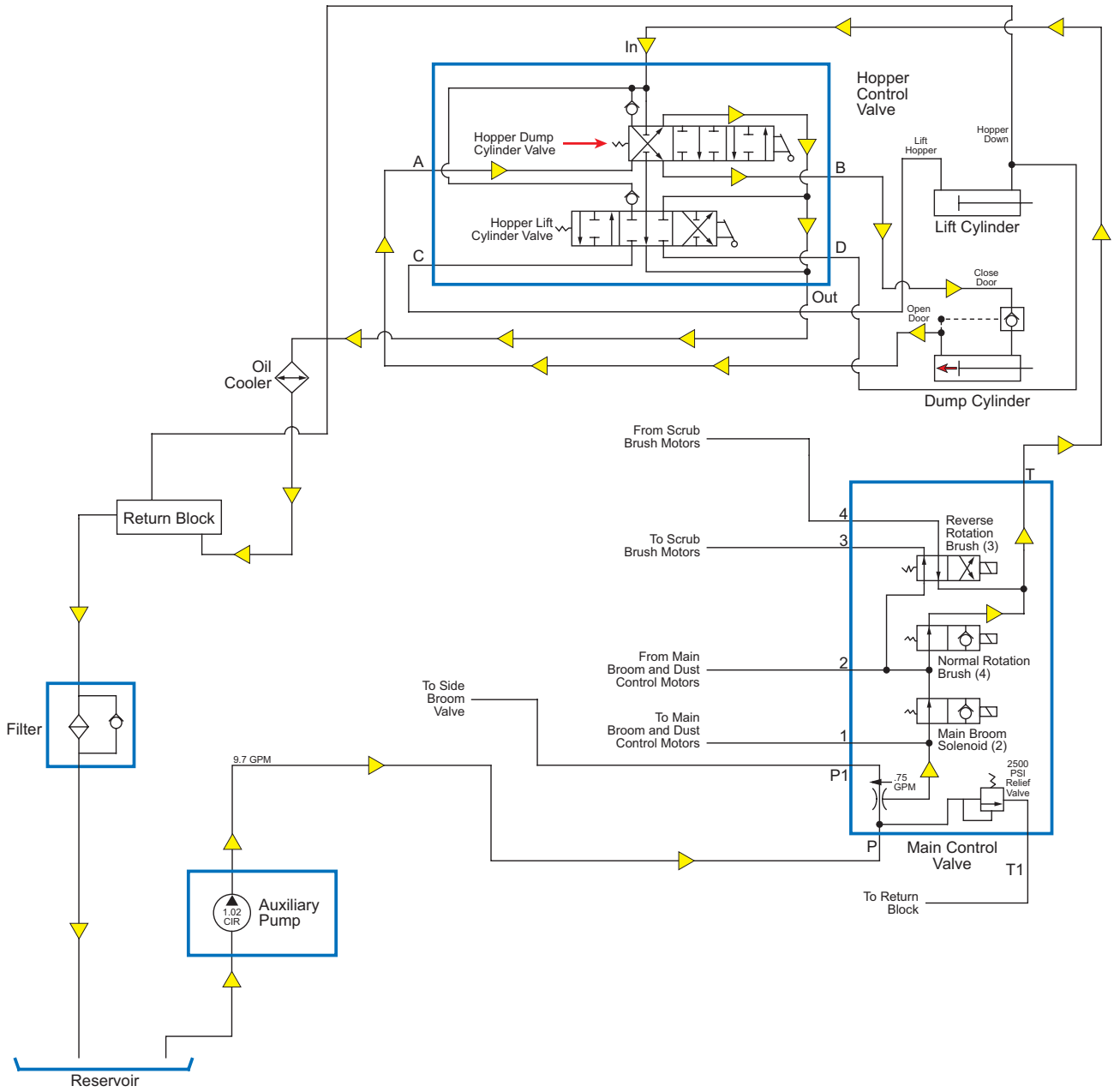

When the hopper dump door lever is moved to the “close” position, the oil flows through the check valve on the **Hopper Dump Cylinder Valve** and to the top port on the **Dump Cylinder** to close the hopper dump door.

The oil from the bottom port on the **Dump Cylinder** flows back through the **Hopper Dump Cylinder Valve**, then to the return line going to the **Oil Cooler**, **Filter** and **Reservoir**.

Component Locations

The following components are included in this section:

- Hopper Lift Cylinder
- Hopper Dump Door Cylinder
- Hopper Switch and Hopper Door Switch
- Hopper Control Valve

The **Hopper Lift Cylinder** is attached to the machine frame and **Hopper**, and raises and lowers the **Hopper**.

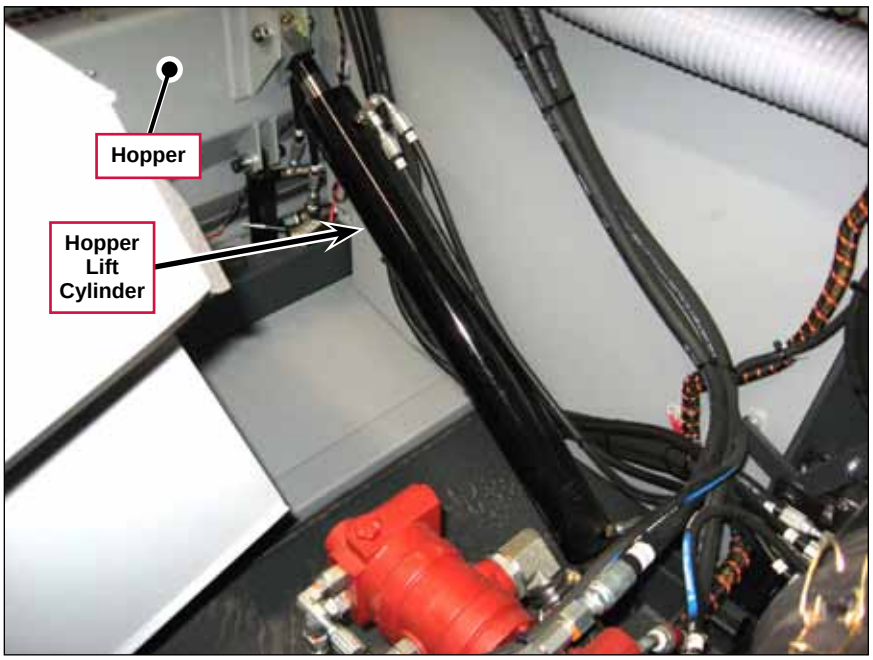

The **Hopper Dump Door Cylinder** opens and closes the **Hopper Dump Door**.

The **Hopper Switch** contacts the **Hopper Dump Door Cylinder** and closes when the **Hopper** is down.

The **Hopper Door Switch** contacts the **Hopper Dump Door** and closes when the **Hopper Dump Door** is closed.

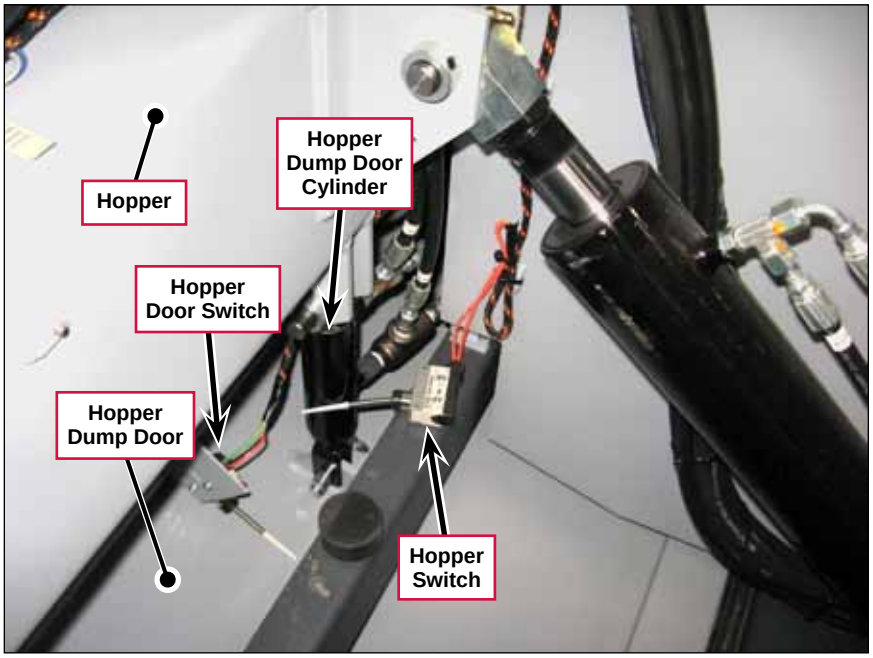

The **Hopper Control Valve** is mounted on the frame to the right of the hydraulic pumps. The **Links** connect to the two individual valves to the hopper lift lever and hopper dump door lever.

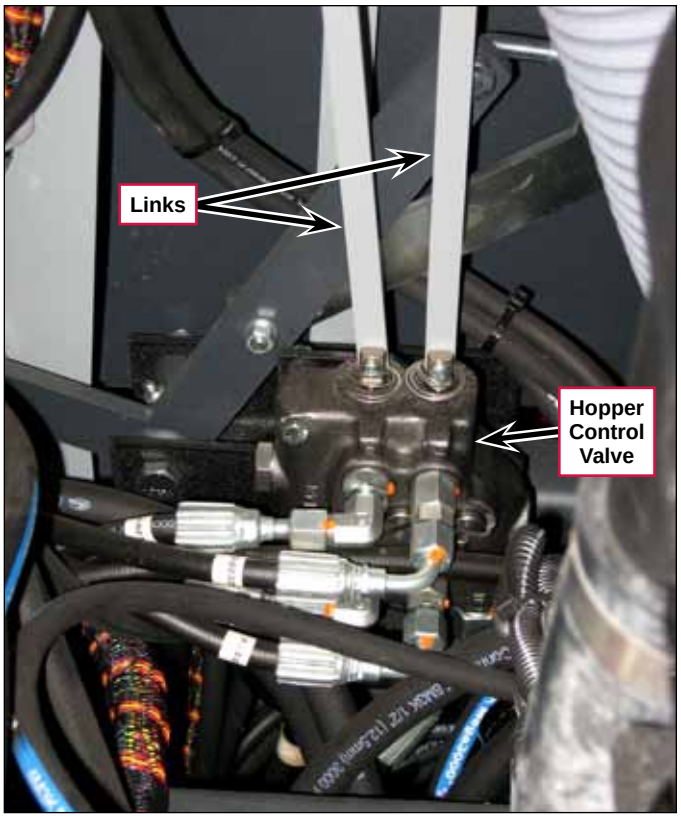

Lubrication Points

Warning! ***Before performing any machine maintenance, make sure the key switch is off, the key is removed from the machine and the parking brake is engaged.***

Every 100 hours apply a high-quality lithium-based grease to the following areas:

- The **Grease Fitting** on the top of the **Hopper Lift Cylinder**.
- The **Pin** and **Collars** connecting the **Hopper Lift Cylinder** to the frame yoke.

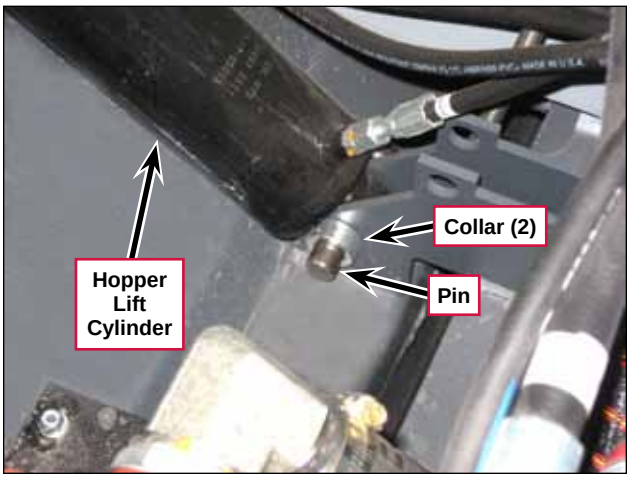

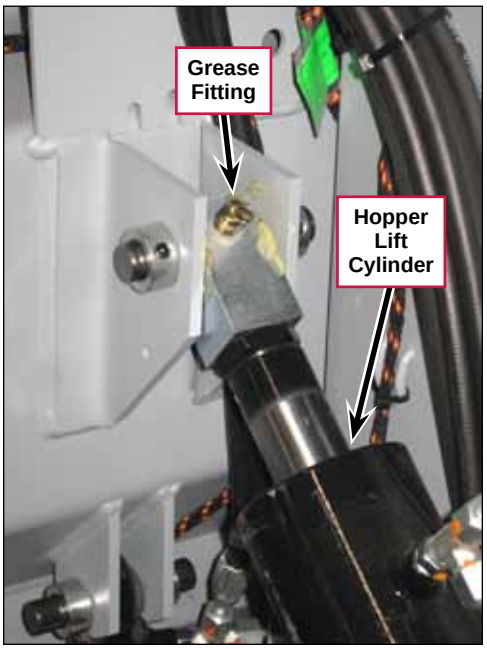

- The **Pins** and **Collars** connecting the **Hopper Dump Door Cylinder** to the **Hopper Dump Door** and hopper yoke.

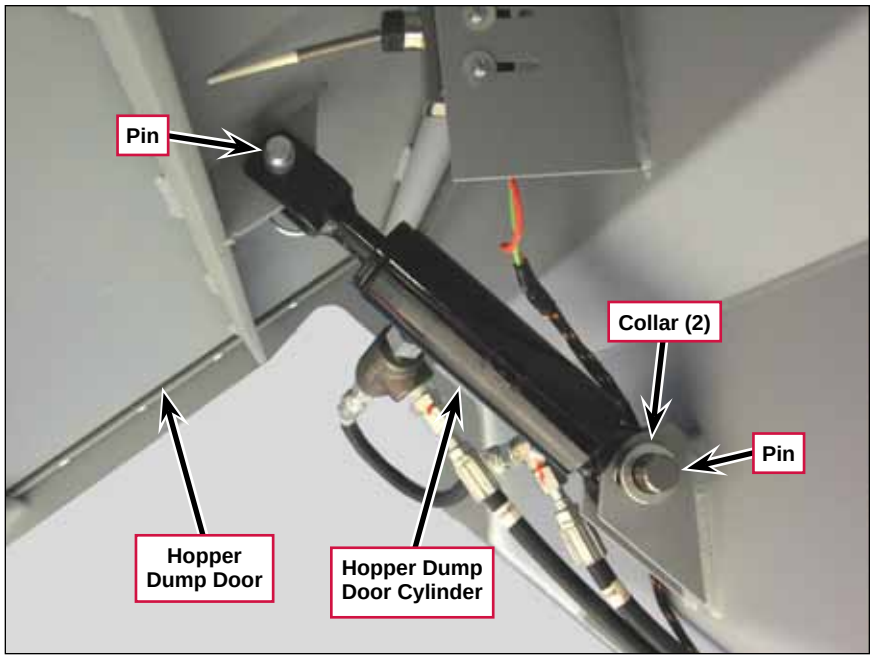

- The **Hopper Pivot Points**. Note that these are easier to access if the **Support Wing Covers** are removed as shown here.

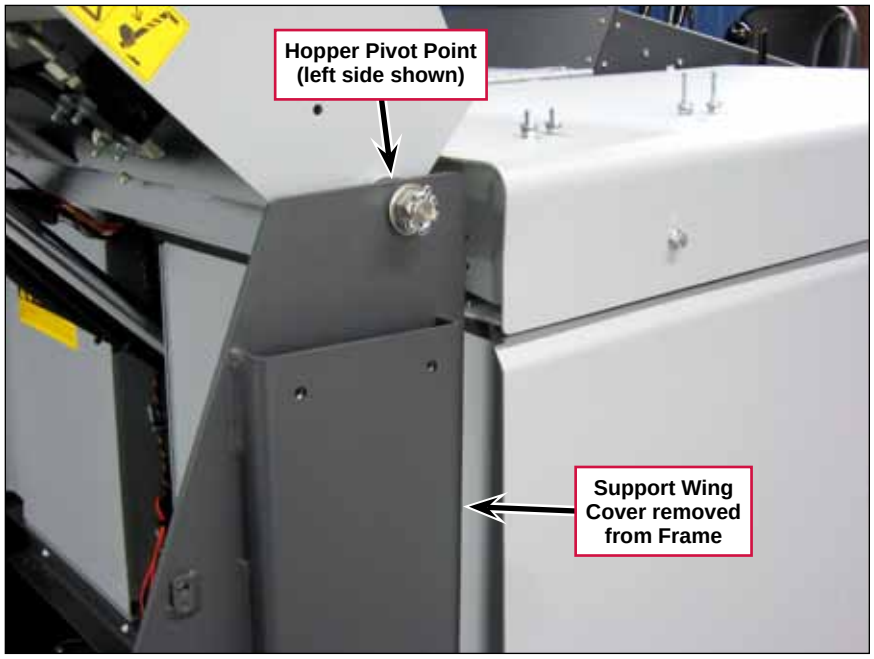

- The four hopper rod **Grease Fittings**.

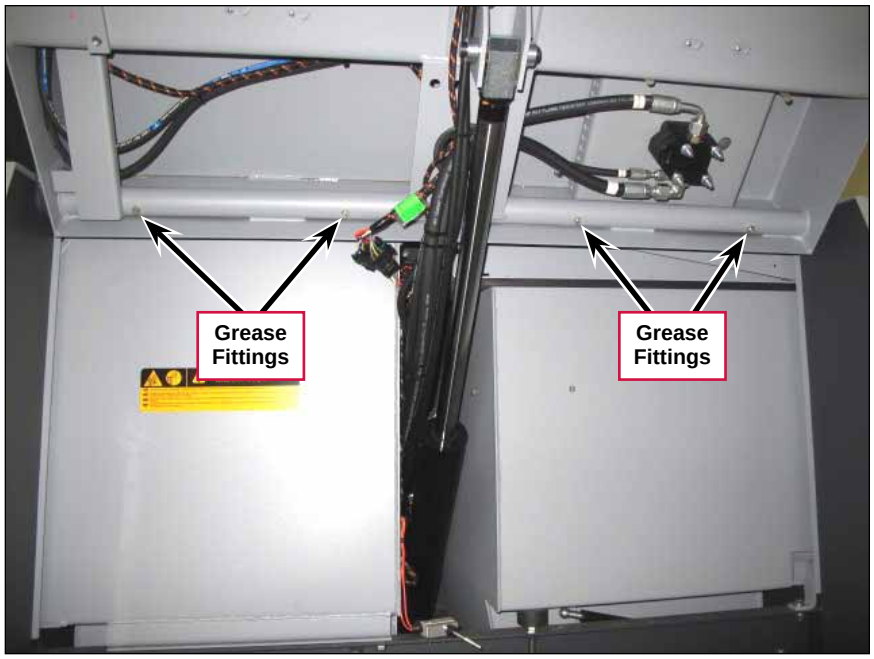

Warning! ***Never work under the hopper without first engaging the Safety Lock Arm.***

Troubleshooting

Problem	Cause	Correction
Hopper not rising when the hopper lift lever is moved to the “raise” position.	The hopper lift cylinder valve in the hopper control valve is not operating correctly.	Check the hopper lift cylinder valve and repair/ replace as necessary.
	Binding in the hopper mount or hopper lift cylinder.	Check for any mechanical binding or damage to the hopper pivot points, hopper lift cylinder and cylinder mounting points, and correct as necessary.
Hopper dump door not opening or closing when the hopper dump door lever is moved to the “open” or “close” position.	The hopper dump cylinder valve in the hopper control valve is not operating correctly.	Check the hopper dump cylinder valve and repair/ replace as necessary.
	Binding in the dump door mount or dump door cylinder.	Check for any mechanical binding or damage to the dump door pivot points, dump door cylinder and cylinder mounting points, and correct as necessary.
Hopper dump door not opening when the hopper dump door lever is moved to the “open” position.	Hopper door pilot check valve not operating correctly.	Check the hopper door pilot check valve and repair/ replace as necessary.

Hydraulic System

Functional Description

Overview

The hydraulic system powers the drive wheel motor, scrub brushes, vacuum fan, main broom, and side broom (if the machine is so equipped). The hydraulic system also actuates the scrub deck and squeegee deck cylinders, hopper lift and hopper door cylinders (VD machines only), and the power steering unit and power steering cylinder.

Electrically-controlled solenoid valves direct the hydraulic oil to the various system components to perform the steering, scrubbing, sweeping, dust control and solution recovery functions.

The hydraulic oil circulates through the oil cooler attached to the rear of the engine radiator.

The hydraulic return oil filter is mounted on top of the oil reservoir and has a replaceable filter element.

Note: *The individual hydraulic motors and cylinders are described in the corresponding machine system sections.*

Hydraulic Pumps

The engine drives the two hydraulic pumps that send the hydraulic oil to the various components:

- The **Drive Pump** (1.24 CIR) is a variable-displacement axial piston pump that powers the drive wheel.

  Note that **Drive Pumps** on machines prior to serial number 1000034942 have a slightly different hose/port configuration than that shown here.

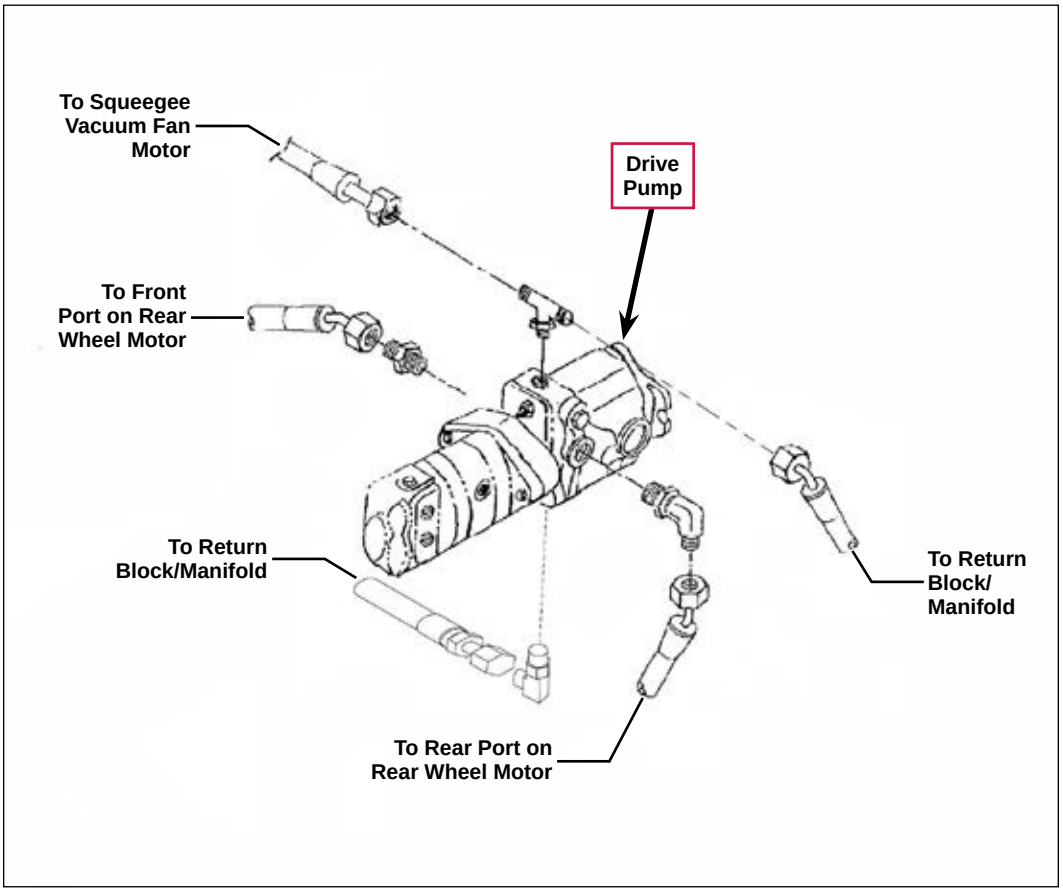

- The **Auxiliary Pump** is a multiple-gear pump. Two separate 1.02 CIR output ports power the other machine systems.

  Note that the gas and diesel fitting configurations are slightly different, but the port functions are the same.

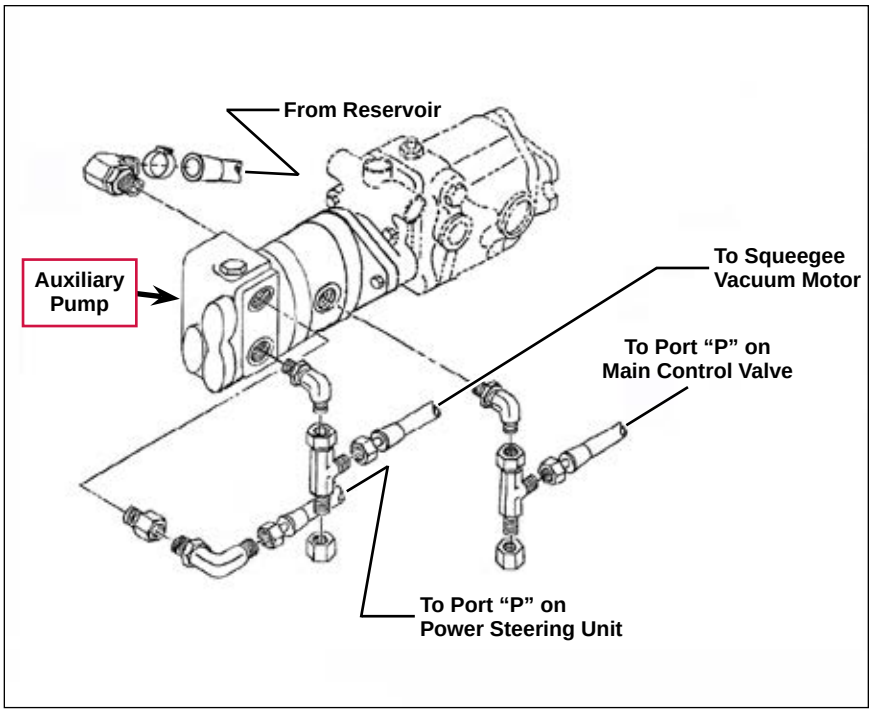

Hydraulic Valves

- The **Main Control Valve** controls the oil flow to the main broom motor, dust control motor, scrub brush motors and hopper control valve.

  Note that the functions of ports **3** and **4** will be reversed when the scrub motors are run in the reverse rotation.

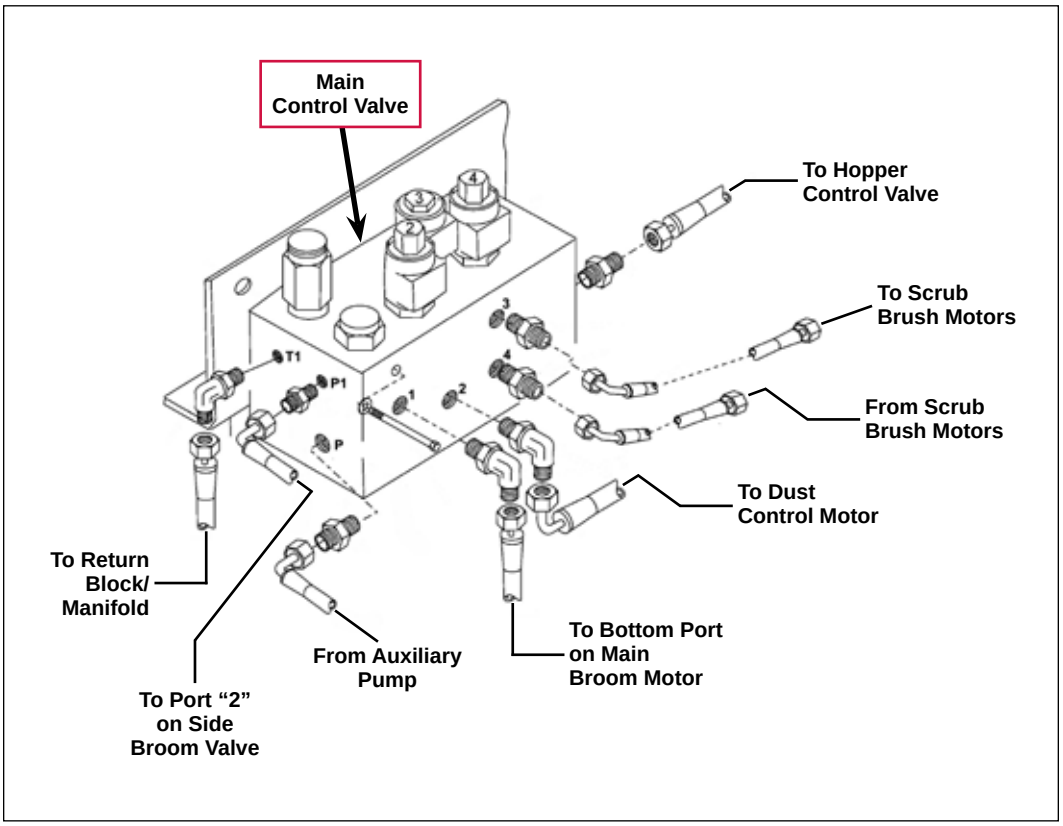

- The **Cylinder Control Valve** controls the oil flow to the scrub deck cylinder and squeegee deck cylinder.

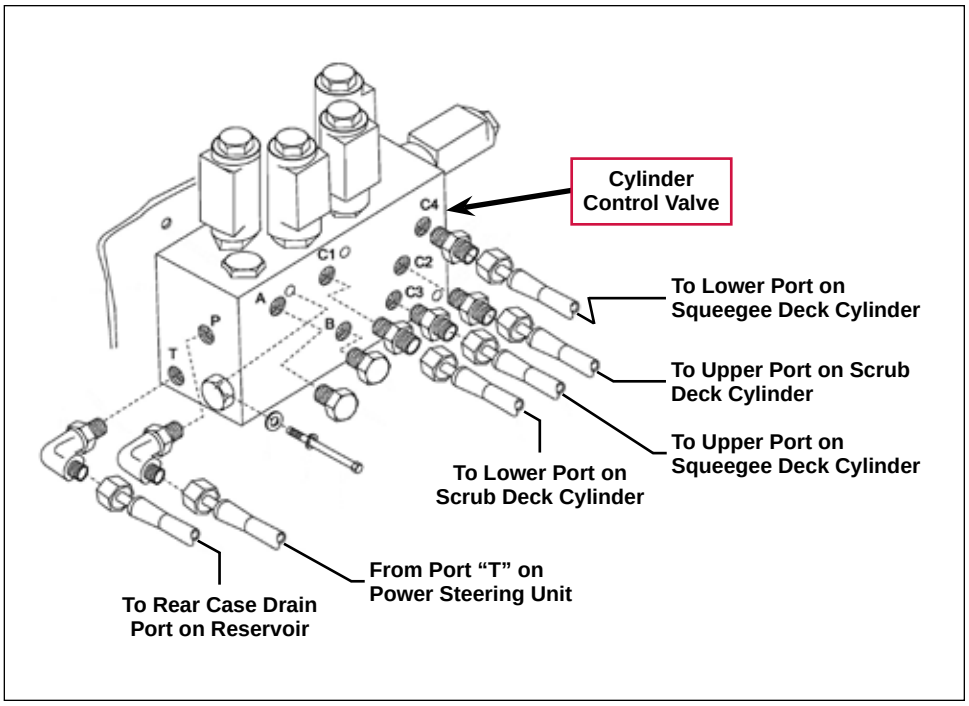

Return Block/Manifold

The **Return Block** (called the "Return Manifold" in the Parts List) collects the oil from the various hydraulic machine components and directs it back into the reservoir.

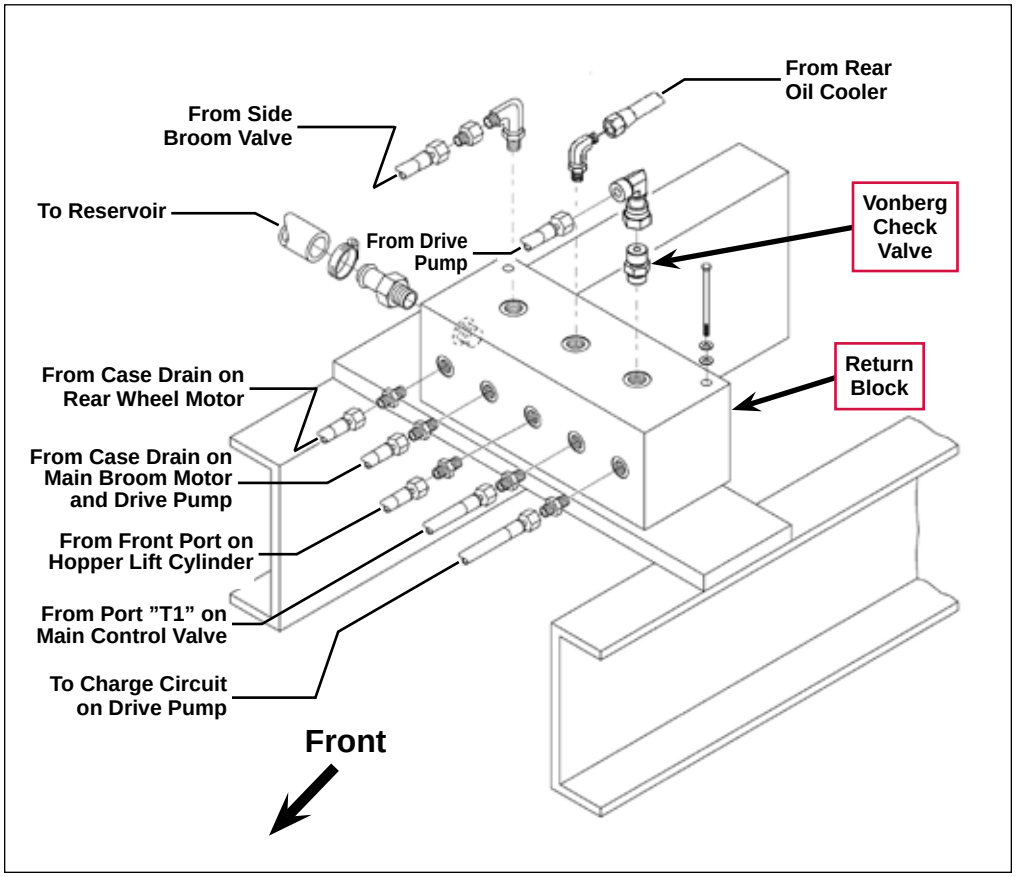

Electrical Schematic

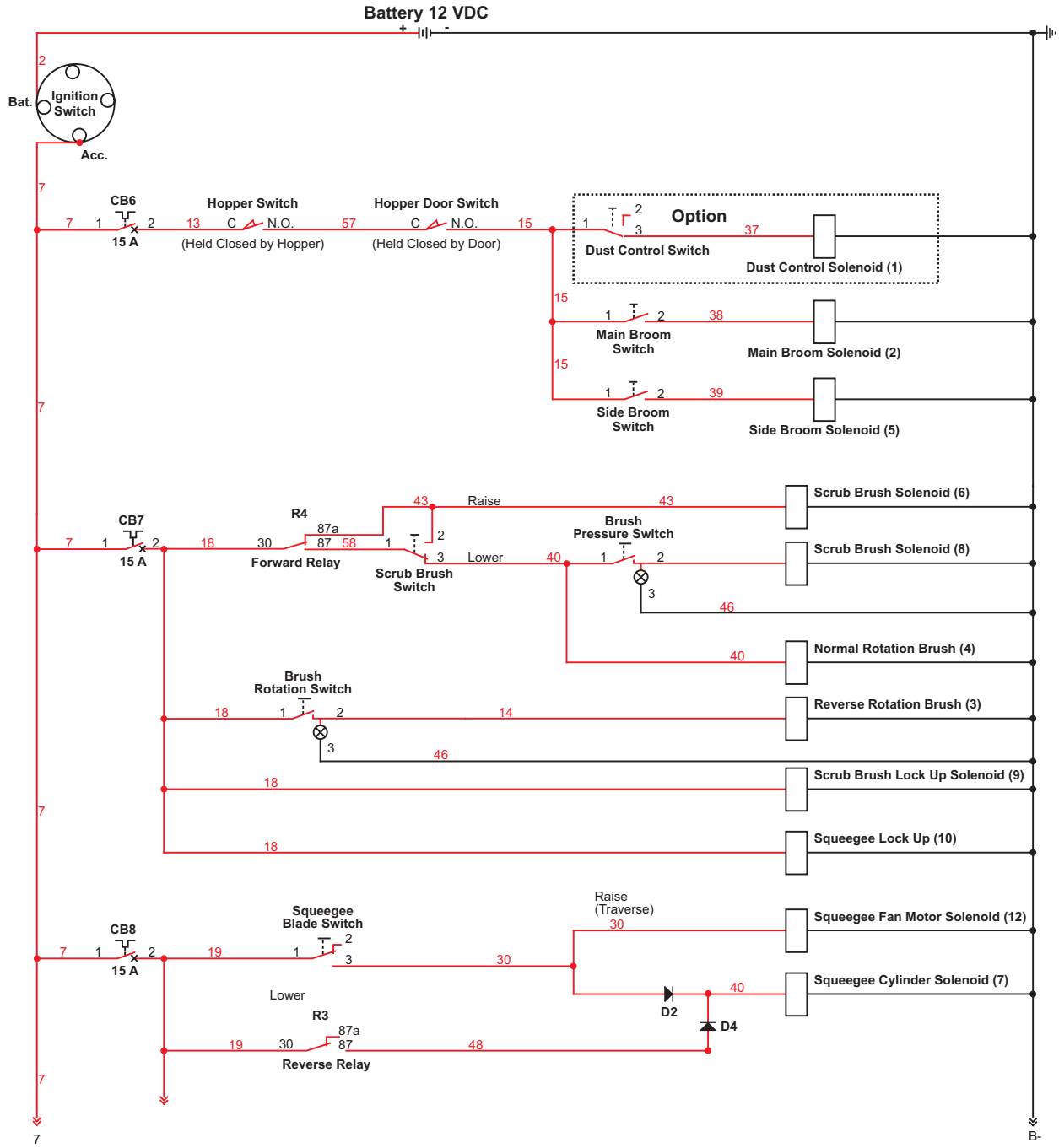

Electrical Circuit Description

The switches on the instrument panel control the positive voltage to the corresponding **Solenoids**.

When the proximity sensors at the drive pedal actuate the **Reverse Relay** (position **87**), it sends voltage to the **Squeegee Cylinder Solenoid (7)** through diode **D4** to energize the solenoid valve and raise the squeegee. Diode **D2** prevents voltage from the **Reverse Relay** from energizing the **Squeegee Fan Motor Solenoid (12)**. This allows the squeegee vacuum fan motor to run when the machine is in reverse.

Hydraulic Schematics

Variable Dump Machine

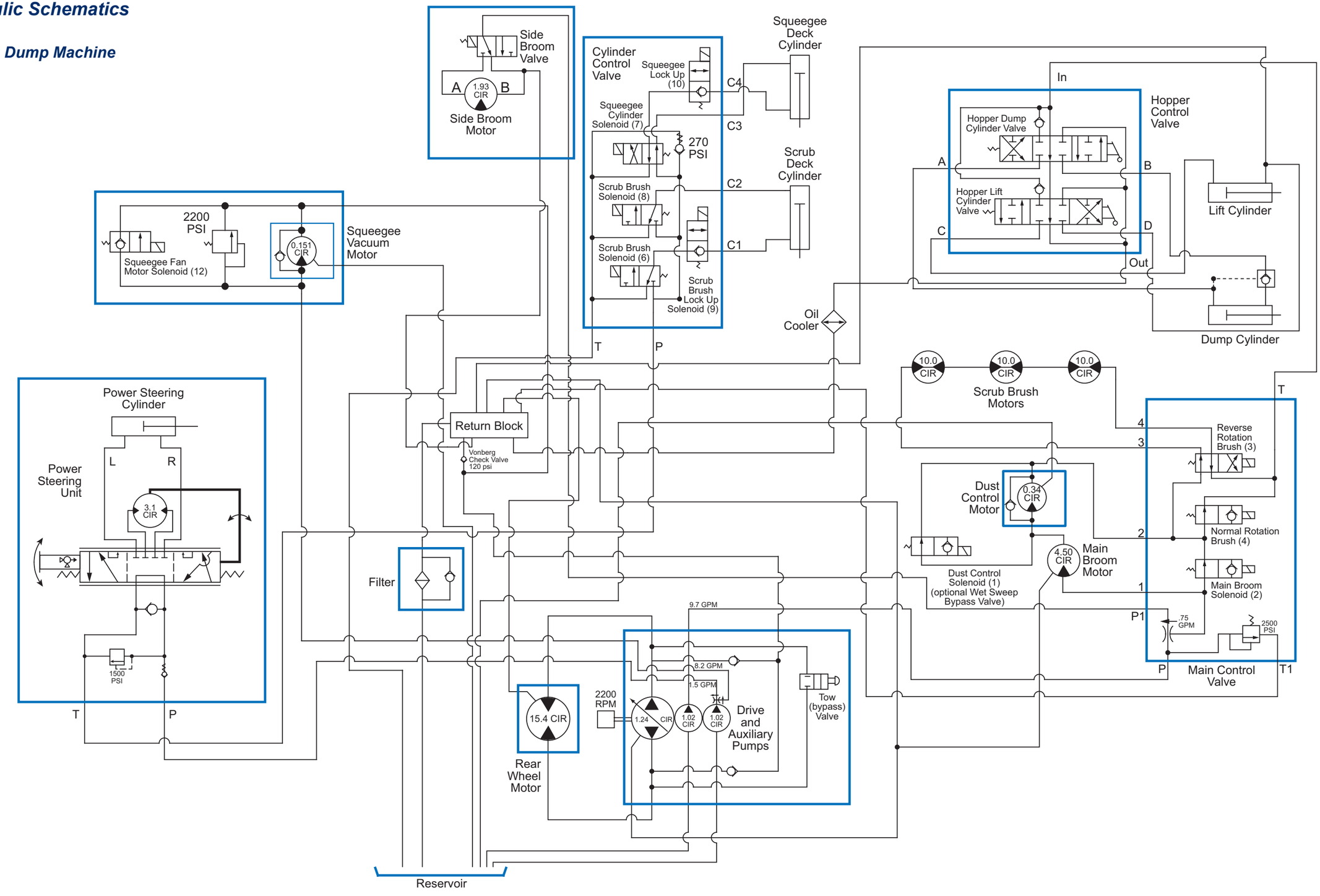

Manual Dump Machine

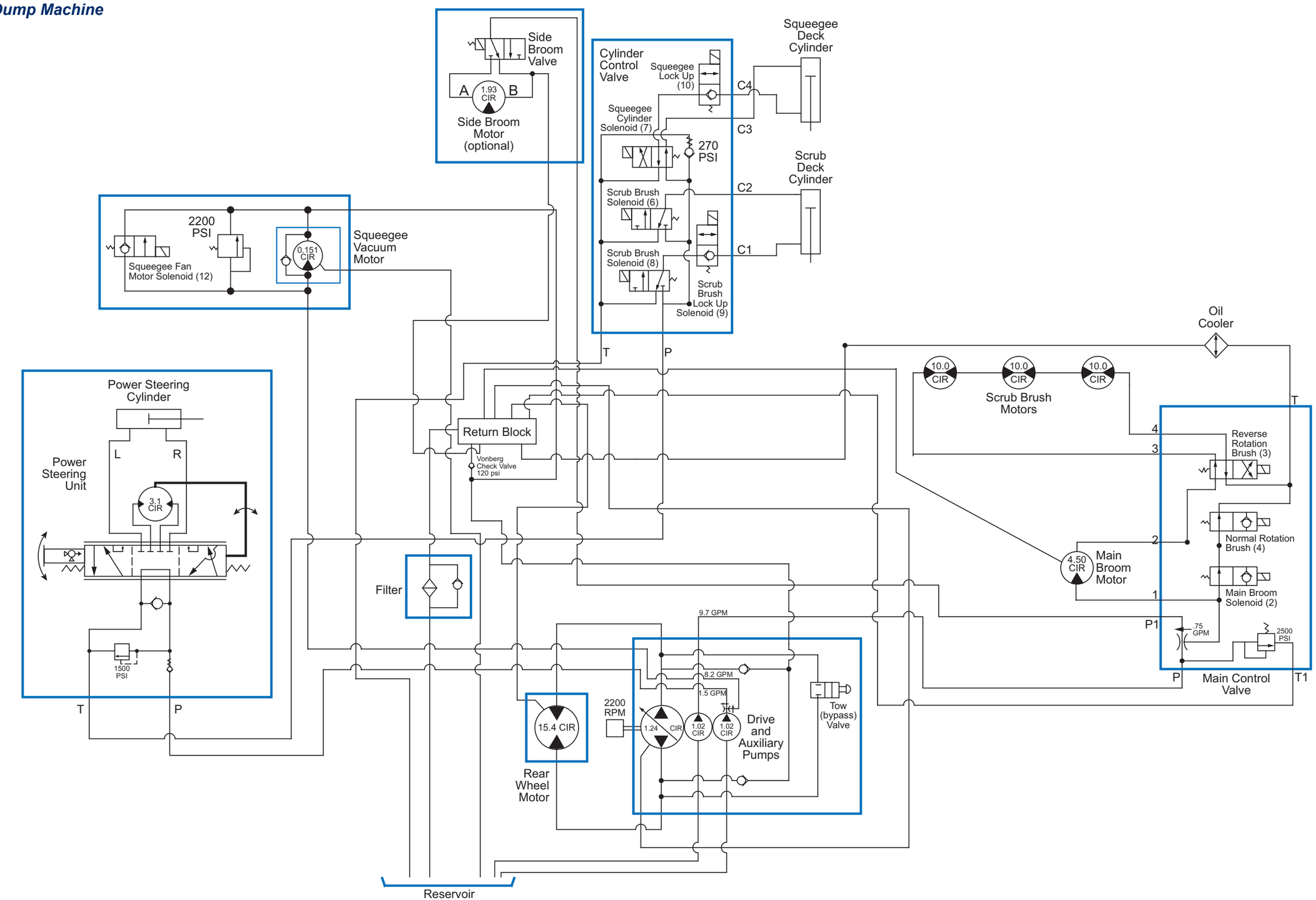

Component Locations

The following components are included in this section:

- Hydraulic Pumps
- Hydraulic Reservoir
- Oil Filter
- Oil Cooler
- Main Control Valve
- Cylinder Control Valve
- Return Block/Manifold

The **Drive Pump** and **Auxiliary Pump** are mounted on the rear of the engine (toward the front of the machine) and are driven by the engine crankshaft.

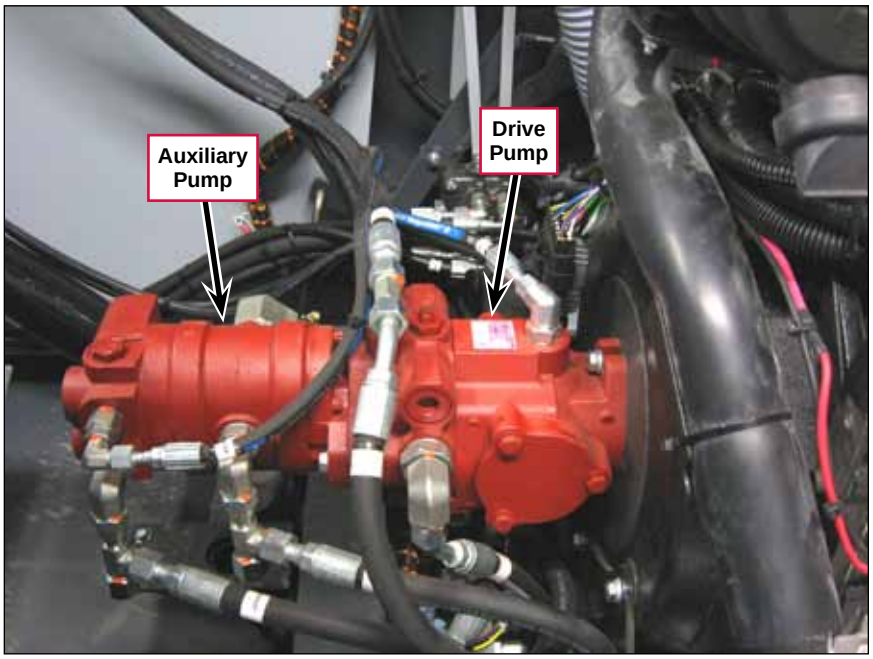

The **Hydraulic Oil Reservoir** is located to the right of and below the Operator seat. A **Fluid Level Sight Gauge** shows the oil level in the **Hydraulic Oil Reservoir**.

The **Oil Filter** mounted to the top of the **Hydraulic Oil Reservoir** filters the incoming oil.

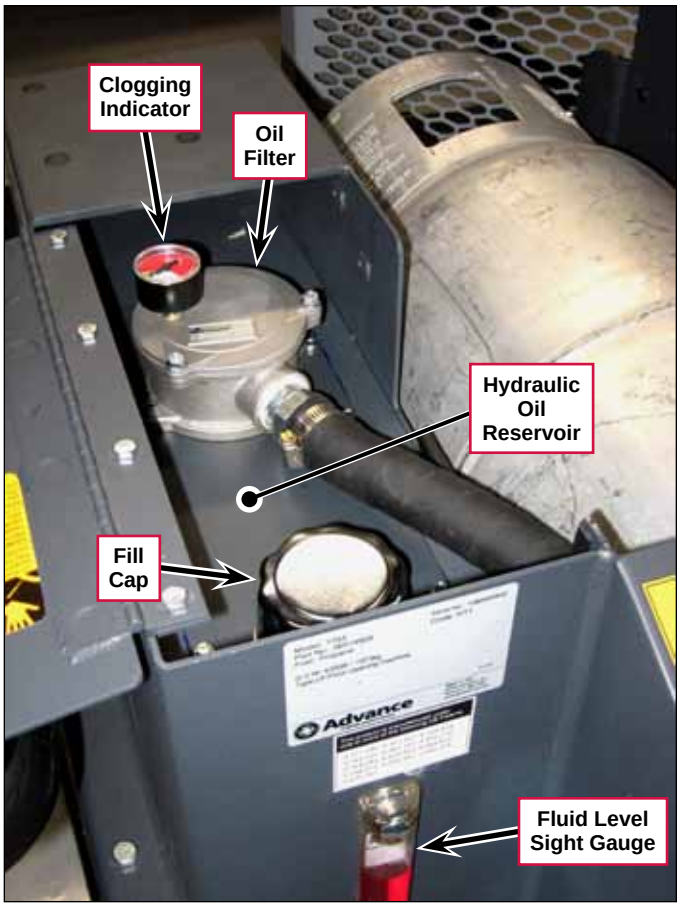

The **Clogging Indicator** is a pressure gauge on the return line that displays the oil pressure upstream of the **Oil Filter**. When the pressure required to pass the oil through the **Oil Filter** becomes too high (needle in the red zone), the **Oil Filter** element must be replaced.

The **Oil Filter** has a check valve that will open to bypass the **Oil Filter** when the incoming oil pressure exceeds 15 psi.

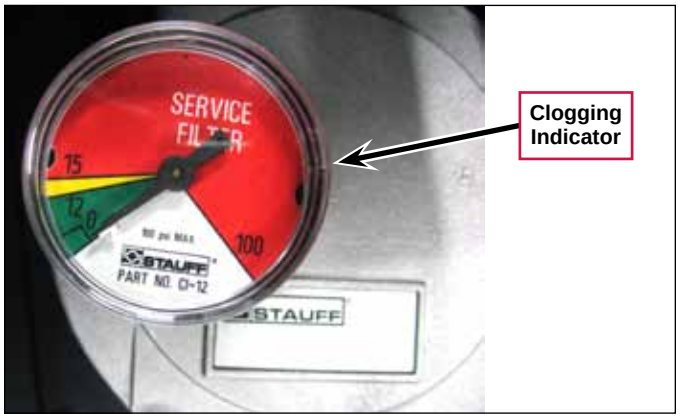

The **Oil Cooler** is mounted to the rear of the engine **Radiator**.

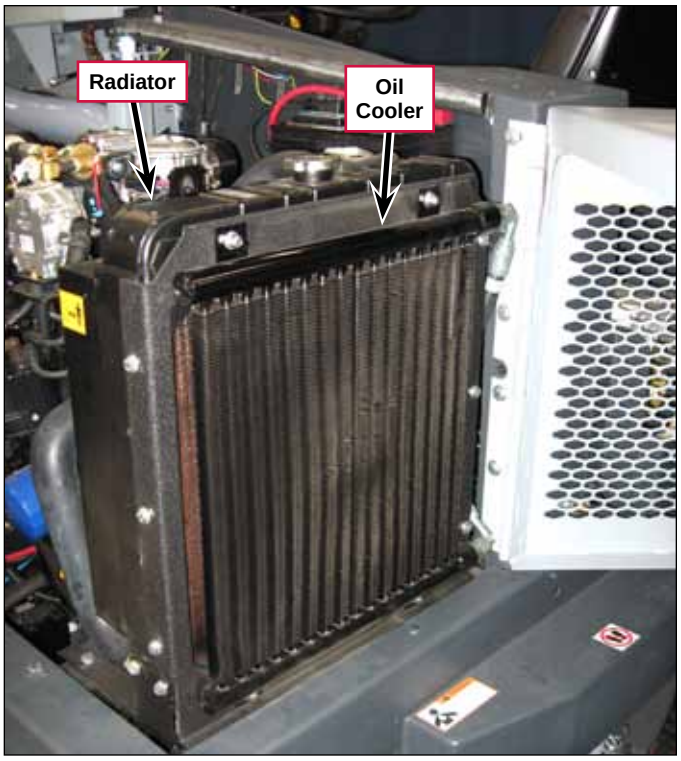

The **Main Control Valve** is mounted on the underside of the machine, in front of and to the left of the scrub deck.

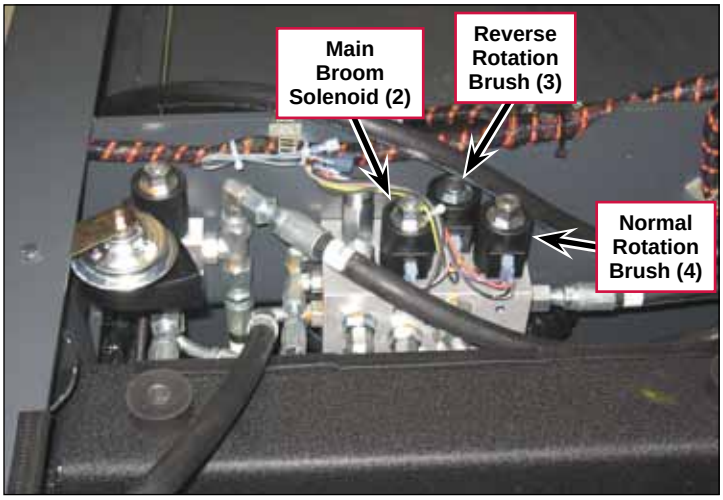

Main Control Valve
(top view - shown while machine is being assembled)

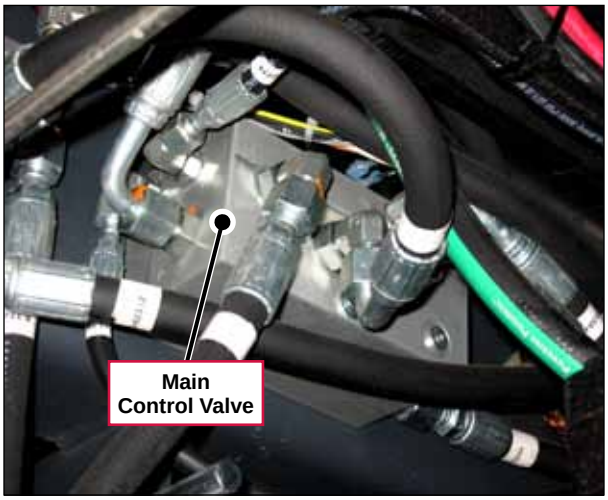

Main Control Valve
(bottom view - shown mounted in assembled machine)

The **Cylinder Control Valve** is located below the access panel on the floor of the Operator compartment.

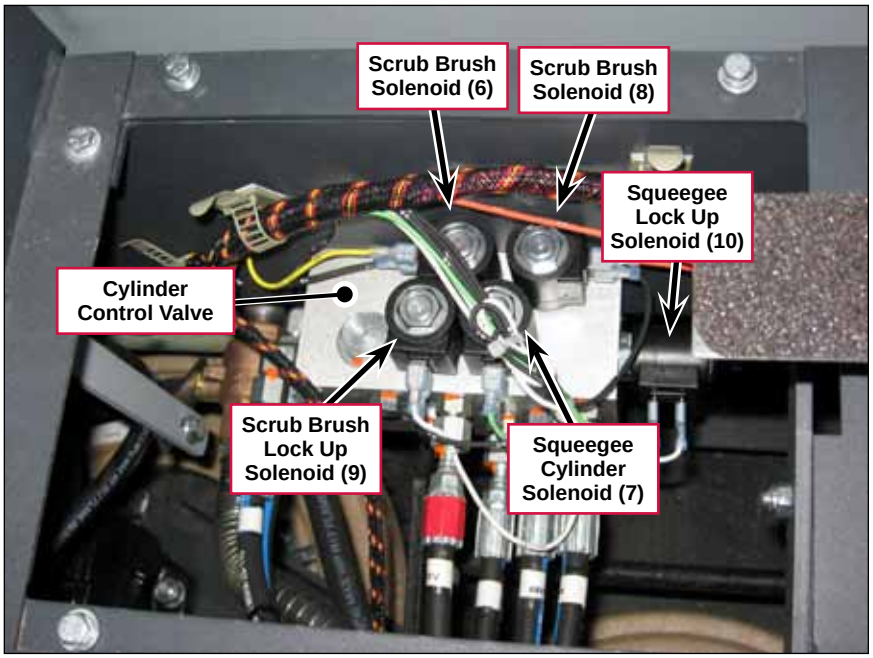

The **Return Block Manifold** is attached to the frame behind the hopper hydraulic valves on the right side of the machine.

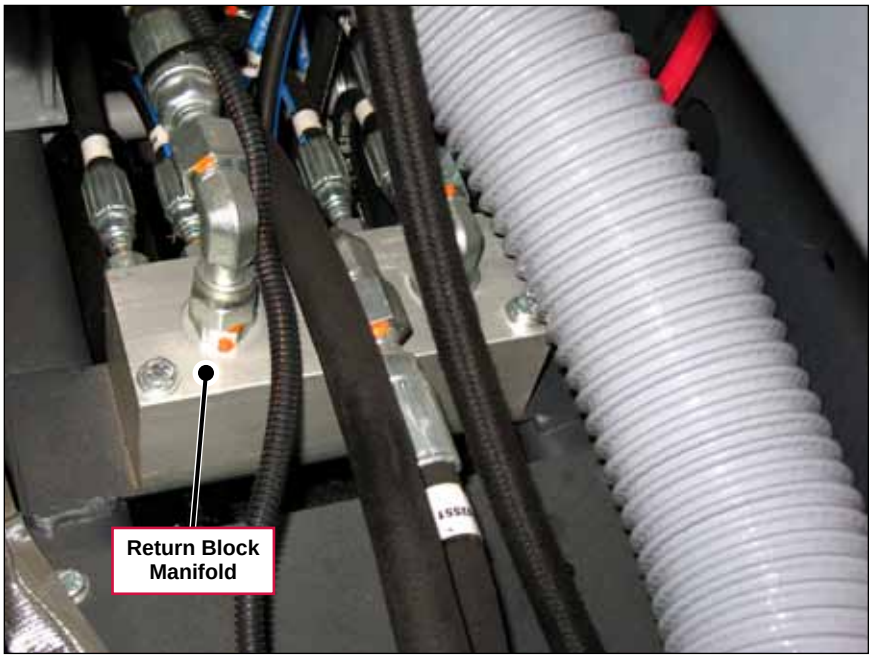

Maintenance and Adjustments

Warning! ***Before performing any machine maintenance or adjustments, make sure the key switch is off, the key is removed from the machine and the parking brake is engaged.***

Hydraulic Oil Level

1. Check the hydraulic oil level on the **Fluid Level Sight Gauge**. The oil level should be within the top and bottom lines.
2. If you need to add oil:
   a. Press the seat cover latch and swing the Operator seat toward the right to access the hydraulic oil reservoir.
   b. Remove the fill cap from the tank and add Mobil Multi Purpose ATF or equivalent Dexron III fluid as needed.
   c. Reinstall the fill cap, then swing the Operator seat back up into position.

Note: *Change and flush the oil if major contamination from a mechanical failure occurs.*

Hydraulic Oil Filter

Caution! ***Make sure the hydraulic system is not under pressure, and that the hydraulic filter and reservoir are cool to the touch before servicing the filter.***

Make sure you are wearing the appropriate clothing and eye protection when working with or near the hydraulic system.

1. Remove the screws holding the **Top Cap** to the **Hydraulic Oil Filter** and remove the **Top Cap**.
2. Remove the filter element from the **Hydraulic Oil Filter**.
3. Replace the filter element as necessary.
4. Reinstall the filter element into the **Hydraulic Oil Filter**.
5. Reinstall the **Top Cap** onto the **Hydraulic Oil Filter**, then reinstall and tighten the screws.

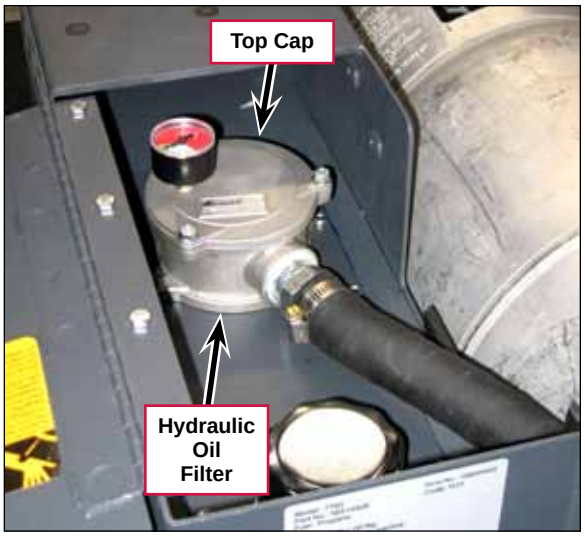

Troubleshooting

General Troubleshooting

Problem	Cause	Correction
General poor hydraulic performance.	Low oil hydraulic level.	Check the oil level in the reservoir and add oil as necessary.
	Hydraulic oil temperature too high.	• Check for any restrictions to or from the oil cooler and correct as necessary. • Clean the cooling fins on the oil cooler to ensure adequate airflow through the cooler.
	Hydraulic oil filter plugged.	Clean or replace the filter element as necessary.
	Pump(s) failing.	Check the output pressure from the pump(s). If below specs, replace the pump(s).
	Contamination in the hydraulic system.	Drain, flush and refill the system.

General Information Regarding Checking Hydraulic Pressures

Accurate measurements are the key to troubleshooting a hydraulic system. Once you obtain accurate measurements you can compare them to the specifications to analyze a problem.

You can use digital tachometers, flow gauges/meters or pressure gauges to troubleshoot the hydraulic system. The pressure gauge should have a range of 0 to 3000 psi (see the Special Tools section). The flow meter must be rated to 3000 psi and 10 gal./min.

The most convenient way to check for oil flow is to check the RPM of the motor that is performing poorly. Refer to the appropriate ***Hydraulic Specifications*** table to determine the motor RPM. If the motor speed is correct, the pump is producing the correct amount of oil flow. However, this does not mean that if a motor is running too slow the problem is in the pump.

The following information should be used to check for correct motor RPM, system pressure and relief valve settings. The readings are nominal figures and there will be variations due to manufacturing tolerances and system oil temperature. If any reading varies greater than 20 percent, there will be a noticeable loss of performance and the problem should be corrected.

Checking Nominal Pressure Readings

Note: *There are two* ***#8 Flat Face O-ring Fittings*** *on the* ***Auxiliary Pump*** *that can be used to check the pressure from both sides of the* ***Auxiliary Pump****. Checking the hydraulic pressures at other locations will require you to assemble the appropriate fittings that will allow you to connect your pressure gauge at that location.*

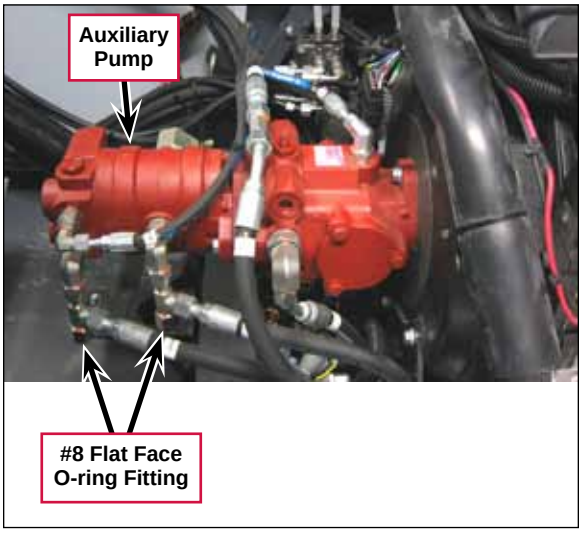

1. Install the appropriate fittings between the hydraulic hose and the cylinder or motor that will allow you to connect the pressure gauge.
2. Run the engine in the high throttle position and allow the hydraulic oil to warm up.
   - The bypass pressure is the pressure reading with no motor or cylinder operating.
   - The operational pressure is the pressure range in which the motor or cylinders will operate.
   - A much lower than normal bypass pressure could indicate a gear pump problem.
   - If the bypass pressure remains the same after turning the function on, there could be a problem in the control valve or circuit.
   - If the operational pressure is within range but the motor speed is too slow, the problem could be in the motor.
   - Check individual system ***Troubleshooting*** sections in this manual for additional information.

Specifications

General Specifications

Component	Specifications	
Capacities	System Capacity – 16.5 gal. [62.46 L]	
	Reservoir Capacity – 6 gal. [22.7 L]	
Fluid Type	Mobil Multi Purpose ATF or equivalent Dexron III fluid	
Drive Pump	Type – manually-variable displacement, axial piston pump, tow valve included	
	Displacement – 1.24 CIR	
	Speed – 3600 RPM max.	
	Continuous pressure – 3000 PSI [206.8 bar] max.	
	Relief Setting, Main Ports – 3500 psi [241.3 bar]	
Auxiliary Pump	Type – multiple gear pump	
	Displacement	Front – 1.02 CIR
		Rear – 1.02 CIR
Main Control Valve	Solenoid Valves	Initial Current Draw – 1.67 amps
		Nominal Coil Resistance – 7.2 ohms
Cylinder Control Valve	Solenoid Valves	Initial Current Draw – 1.22 amps
		Nominal Coil Resistance – 9.8 ohms

Scrub Deck Hydraulic Specifications

		In Neutral				Forward or Reverse							
						Forward Scrub Brush Rotation				Reverse Scrub Brush Rotation			
		Scrub Deck Raised		Scrub Deck Raised		Scrub Deck Normal Down		Scrub Deck Heavy Down		Scrub Deck Normal Down		Scrub Deck Heavy Down	
Hose	Location	Pressure	Flow	Pressure	Flow	Pressure	Flow	Pressure	Flow	Pressure	Flow	Pressure	Flow
7-33-02190	Cylinder Control Valve Pressure Inlet from Port “T” on Power Steering Unit	367 PSI	1.4 GPM	367 PSI	1.4 GPM	367 PSI	1.4 GPM	420 PSI	1.4 GPM	367 PSI	1.4 GPM	420 PSI	1.4 GPM
7-33-02225	Cylinder Control Valve Outlet to Rear Case Drain Port on Reservoir	< 50 PSI	1.4 GPM	< 50 PSI	1.4 GPM	< 50 PSI	1.4 GPM	< 50 PSI	1.4 GPM	< 50 PSI	1.4 GPM	< 50 PSI	1.4 GPM
7-33-02189	Scrub Deck Cylinder Lower Port to Port “C1” on Cylinder Control Valve	311 PSI	0 GPM	311 PSI	0 GPM	< 50 PSI	0 GPM	< 50 PSI	0 GPM	< 50 PSI	0 GPM	< 50 PSI	0 GPM
7-33-02189	Scrub Deck Cylinder Upper Port to Port “C2” on Cylinder Control Valve	< 50 PSI	0 GPM	< 50 PSI	0 GPM	< 50 PSI	0 GPM	420 PSI	0 GPM	< 50 PSI	0 GPM	420 PSI	0 GPM
7-33-02326	Center Scrub Motor Outlet	< 50 PSI	0 GPM	< 50 PSI	0 GPM	840 PSI	8.1 GPM	1150 PSI	7.4 GPM	520 PSI	8.1 GPM	680 PSI	7.4 GPM
7-33-02327	Left Scrub Motor Outlet	< 50 PSI	0 GPM	< 50 PSI	0 GPM	400 PSI	8.1 GPM	400 PSI	7.4 GPM	1050 PSI	8.1 GPM	1500 PSI	7.4 GPM
7-33-02403	Right Scrub Motor Outlet	< 50 PSI	0 GPM	< 50 PSI	0 GPM	1050 PSI	8.1 GPM	1500 PSI	7.4 GPM	400 PSI	8.1 GPM	400 PSI	7.4 GPM
7-33-02546	Scrub Motors (Left) Inlet	< 50 PSI	0 GPM	< 50 PSI	0 GPM	540 PSI	8.1 GPM	590 PSI	7.4 GPM	820 PSI	8.1 GPM	1100 PSI	7.4 GPM
7-33-02180	To Return Block from Port “T1” on 2500 PSI Relief Valve	< 50 PSI	0 GPM	< 50 PSI	0 GPM	< 50 PSI	0 GPM	< 50 PSI	1.0 GPM	< 50 PSI	0 GPM	< 50 PSI	1.0 GPM
8-33-02201	To Hopper Valves from “T” Port on Main Control Valve	345 PSI	8.1 GPM	345 PSI	8.1 GPM	345 PSI	8.1 GPM	345 PSI	8.9 GPM	345 PSI	8.1 GPM	345 PSI	8.9 GPM
8-33-02202	To Port “P” on Main Control Valve from Auxiliary Pump	400 PSI	8.9 GPM	400 PSI	8.9 GPM	1525 PSI	8.9 GPM	2000 PSI	8.9 GPM	1525 PSI	8.9 GPM	1950 PSI	8.9 GPM

Scrub Deck Motors	185 RPM	170 RPM	185 RPM	170 RPM

Transport Circuit Hydraulic Specifications

								Asphalt				Sealed Concrete			
		Rear Wheel Elevated Off Floor						Sweeping in Float				Sweeping in Float			
		Full Forward		Neutral		Full Reverse		Full Forward		Full Reverse		Full Forward		Full Reverse	
Hose	Location	Pressure	Flow	Pressure	Flow	Pressure	Flow	Pressure	Flow	Pressure	Flow	Pressure	Flow	Pressure	Flow
7-33-02223	Rear Wheel Motor “A” Port	590 PSI	11.3 GPM	240 PSI	0.9 GPM	172 PSI	5.5 GPM	1550 PSI	10.8 GPM	80 PSI	5.0 GPM	1500 PSI	9.6 GPM	90 PSI	4.3 GPM
7-33-02223	Rear Wheel Motor “B” Port	190 PSI	11.2 GPM	175 PSI	0.15 GPM	315 PSI	5.7 GPM	80 PSI	10.1 GPM	750 PSI	5.3 GPM	90 PSI	10.2 GPM	750 PSI	5 GPM
8-33-02184	Rear Wheel Motor Case Drain	< 50 PSI	0.1 GPM	< 50 PSI	0.06 GPM	< 50 PSI	0.2 GPM	< 50 PSI	0.3 GPM	< 50 PSI	0.3 GPM	< 50 PSI	0.6 GPM	< 50 PSI	0.7 GPM

RPM	172 RPM	14 RPM	85 RPM	156 RPM	77 RPM	148 RPM	66 RPM

Note that the relief setting if the wheel is stalled is 3500 psi.

Steering Circuit Hydraulic Specifications

		Steering Only: Stationary					
		Locked Full Clockwise		Locked Full Counterclockwise		Neutral/Center	
Hose	Location	Pressure	Flow	Pressure	Flow	Pressure	Flow
7-33-02191	Power Steering Unit “T” Port	400 PSI	1.4 GPM	380 PSI	1.4 GPM	380 PSI	1.4 GPM
7-33-02334	Power Steering Unit “P” Port	1800 PSI	1.4 GPM	1800 PSI	1.4 GPM	420 PSI	1.4 GPM
7-33-02191	Power Steering Cylinder Rod End	380 PSI	–	1500 PSI	–	–	–
7-33-02225	Power Steering Cylinder Base End	1750 PSI	–	390 PSI	–	–	–

Side Broom Hydraulic Specifications – GM and Mitsubishi Engines

With Hopper Valves in “Neutral”

		Side Broom Only On			Side Broom Off	
Hose	Location	Pressure	RPM	Flow	Pressure	Flow
7-33-02181	Side Broom Motor Inlet	216 PSI	80 RPM	.7 GPM	< 50 PSI	0 GPM
8-33-02277	Side Broom Motor Inlet	216 PSI	+/- 10 RPM	.7 GPM	< 50 PSI	0 GPM
7-33-02181	Side Broom Motor Outlet	< 50 PSI	–	.7 GPM	< 50 PSI	0 GPM
8-33-02277	Side Broom Motor Outlet	< 50 PSI	–	.7 GPM	< 50 PSI	0 GPM
7-33-02191	Side Broom Valve Outlet	< 50 PSI	–	.7 GPM	< 50 PSI	.7 GPM
8-33-02218	Side Broom Valve Inlet	270 PSI	–	.7 GPM	61 PSI	.7 GPM

Main Broom Hydraulic Specifications – GM Engines

With Hopper Valves in “Neutral”

		Main Broom Only ON		
Hose	**Location**	**Pressure**	**RPM**	**Flow**
8-33-02214	Main Broom Motor Inlet from Main Control Valve “1” Port	970 PSI	420 RPM	8.25 GPM
7-33-02332	Main Broom Motor Outlet (High Dump)	830 PSI	+/- 30 RPM	8.25 GPM
8-33-02214	Main Broom Motor Outlet (Low Dump)	50 PSI	–	8.25 GPM
8-33-02214	Main Broom Motor Outlet (Wet Sweep Bypass option)	970 PSI	–	8.25 GPM
8-33-02202	Main Control Valve “P” Port	1115 PSI	–	8.9 GPM
8-33-02201	Main Control Valve “T” Port (High Dump)	380 PSI	–	8.25 GPM
7-33-02734	Main Control Valve “T” Port (Low Dump)	< 50 PSI	–	8.25 GPM
7-33-02180	Main Control Valve “T1” Port	< 50 PSI	–	0.004 GPM

Main Broom Hydraulic Specifications – Mitsubishi Engines

With Hopper Valves in “Neutral”

		Main Broom Only ON		
Hose	**Location**	**Pressure**	**RPM**	**Flow**
8-33-02214	Main Broom Motor Inlet from Main Control Valve “1” Port	970 PSI	420 RPM	8.25 GPM
7-33-02332	Main Broom Motor Outlet (High Dump)	800 PSI	+/- 30 RPM	8.25 GPM
8-33-02214	Main Broom Motor Outlet (Low Dump)	50 PSI	–	8.25 GPM
8-33-02214	Main Broom Motor Outlet (Wet Sweep Bypass option)	940 PSI	–	8.25 GPM
8-33-02202	Main Control Valve “P” Port	1085 PSI	–	8.9 GPM
8-33-02201	Main Control Valve “T” Port (High Dump)	350 PSI	–	8.25 GPM
7-33-02734	Main Control Valve “T” Port (Low Dump)	< 50 PSI	–	8.25 GPM
7-33-02180	Main Control Valve “T1” Port	2 PSI	–	0.004 GPM

Dust Control System Hydraulic Specifications – GM Engines (Variable Dump Models)

With Hopper Valves in “Neutral”

		Dust Control On			Main Broom On Dust Control Off	
Hose	**Location**	**Pressure**	**RPM**	**Flow**	**Pressure**	**Flow**
7-33-02332	Dust Control Motor Inlet (No Wet Sweep Bypass option)	830 PSI	5450 RPM	8.25 GPM	–	–
8-33-02214	Dust Control Motor Inlet (With Wet Sweep Bypass option)	830 PSI	+/- 250 RPM	8.25 GPM	250 PSI	1.1 GPM
7-33-02332	Dust Control Motor Outlet	430 PSI	–	8.25 GPM	430 PSI	1.1 GPM
8-33-02214	Dust Control Solenoid (Wet Sweep Bypass) Valve Inlet	830 PSI	–	8.25 GPM	480 PSI	8.25 GPM
7-33-02205	Dust Control Solenoid (Wet Sweep Bypass) Valve Outlet	430 PSI	–	8.25 GPM	430 PSI	8.25 GPM

Dust Control System Hydraulic Specifications – Mitsubishi Engines (Variable Dump Models)

With Hopper Valves in “Neutral”

		Dust Control On			Main Broom On Dust Control Off	
Hose	**Location**	**Pressure**	**RPM**	**Flow**	**Pressure**	**Flow**
7-33-02332	Dust Control Motor Inlet (No Wet Sweep Bypass option)	800 PSI	5450 RPM	8.25 GPM	–	–
8-33-02214	Dust Control Motor Inlet (With Wet Sweep Bypass option)	800 PSI	+/- 250 RPM	8.25 GPM	219 PSI	1.1 GPM
7-33-02332	Dust Control Motor Outlet	400 PSI	–	8.25 GPM	400 PSI	1.1 GPM
8-33-02214	Dust Control Solenoid (Wet Sweep Bypass) Valve Inlet	800 PSI	–	8.25 GPM	800 PSI	8.25 GPM
7-33-02205	Dust Control Solenoid (Wet Sweep Bypass) Valve Outlet	400 PSI	–	8.25 GPM	400 PSI	8.25 GPM

Squeegee System Hydraulic Specifications – GM Engines

		Squeegee Raised		Squeegee Lowered		Reverse	
Hose	Location	Pressure	Flow	Pressure	Flow	Pressure	Flow
7-33-02225	Cylinder Control Valve “T” port	< 50 PSI	1.4 GPM	< 50 PSI	1.4 GPM	< 50 PSI	1.4 GPM
7-33-02190	Cylinder Control Valve “P” port	370 PSI	1.4 GPM	379 PSI	1.4 GPM	370 PSI	1.4 GPM
8-33-02218	Squeegee Deck Cylinder Rod End	311 PSI	0 GPM	< 50 PSI	0 GPM	311 PSI	0 GPM
8-33-02189	Squeegee Deck Cylinder Base End	< 50 PSI	0 GPM	318 PSI	0 GPM	< 50 PSI	0 GPM
7-33-02224	Vacuum Fan Motor Case Drain	< 50 PSI	0.04 GPM	< 50 PSI	0.04 GPM	< 50 PSI	0.04 GPM
8-33-02327	Vacuum Fan Motor Inlet	280 PSI	7.2 GPM	1320 PSI	7.3 GPM	350 PSI	7.3 GPM
8-33-02192	Vacuum Fan Motor Outlet	150 PSI	7.2 GPM	135 PSI	7.3 GPM	267 PSI	7.3 GPM

Squeegee System Hydraulic Specifications – Mitsubishi Engines

		Squeegee Raised		Squeegee Lowered		Reverse	
Hose	Location	Pressure	Flow	Pressure	Flow	Pressure	Flow
7-33-02225	Cylinder Control Valve “T” port	< 50 PSI	1.4 GPM	< 50 PSI	1.4 GPM	< 50 PSI	1.4 GPM
7-33-02190	Cylinder Control Valve “P” port	370 PSI	1.4 GPM	379 PSI	1.4 GPM	370 PSI	1.4 GPM
8-33-02218	Squeegee Deck Cylinder Rod End	311 PSI	0 GPM	< 50 PSI	0 GPM	311 PSI	0 GPM
8-33-02189	Squeegee Deck Cylinder Base End	< 50 PSI	0 GPM	318 PSI	0 GPM	< 50 PSI	0 GPM
7-33-02224	Vacuum Fan Motor Case Drain	< 50 PSI	0.04 GPM	< 50 PSI	0.04 GPM	< 50 PSI	0.04 GPM
8-33-02327	Vacuum Fan Motor Inlet	350 PSI	7.3 GPM	1800 PSI	7.3 GPM	350 PSI	7.3 GPM
8-33-02192	Vacuum Fan Motor Outlet	267 PSI	7.3 GPM	233 PSI	7.3 GPM	267 PSI	7.3 GPM

Note: *The cylinder Pressures and Flow rates on the preceding pages are with the hopper stabilized and at rest. Peak relief pressure is 2500 psi.*

The pressure while raising the hopper will depend on the weight of the hopper. If the hopper dump door cylinder or hopper lift cylinder is fully-extended or retracted (dump door only) and the lever is not returned to the neutral position, the pressure will go to the relief setting of 2500 psi.

Main Control Valve Specifications

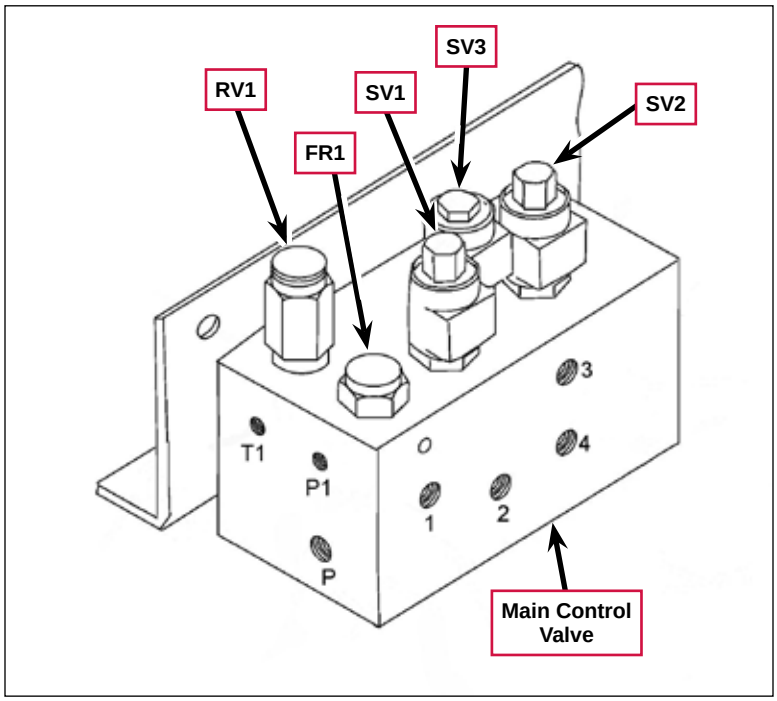

Component	Component Description	Hydraulic Circuit Function
RV1	Poppet-type relief valve	2500 psi [172.4 bar] Relief Valve to T1
FR1	Plug	–
SV1	Solenoid-operated, two-way, piloted, poppet-type hydraulic cartridge valve; normally open, screw-in.	Main Broom Solenoid (2)
SV2	Solenoid-operated, two-way, piloted, poppet-type hydraulic cartridge valve; normally open, screw-in.	Normal Brush Rotation (4)
SV3	A solenoid-operated, four-way, two-position, direct-acting, spool-type, screw-in hydraulic cartridge valve.	Reverse Rotation Brush (3)
Coil	12 VDC, dual spade connectors; nominal coil resistance – 7.2 Ω.	Used on SV1, SV2 and SV3

Cylinder Control Valve Specifications

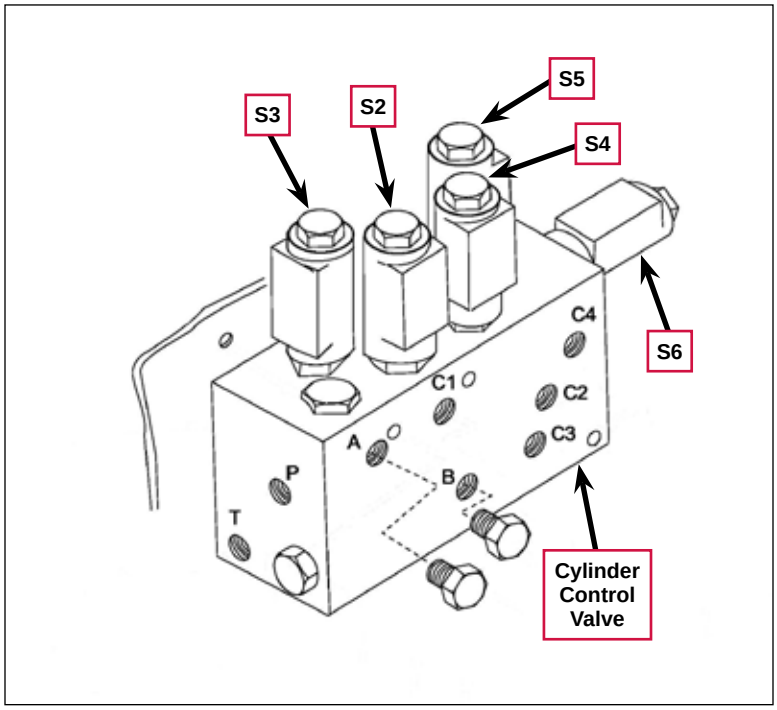

Component	Component Description	Hydraulic Circuit Function
S2	A solenoid-operated, two-way, normally closed, poppet-type, screw-in hydraulic cartridge valve	Scrub Brush Lock Up Solenoid (9)
S3	A solenoid-operated, three-way, direct-acting, spool-type, screw-in hydraulic directional valve	Scrub Brush Solenoid (6)
S4	A solenoid-operated, four-way, two-position, direct-acting spool-type, screw-in hydraulic cartridge valve	Squeegee Cylinder Solenoid (7)
S5	A solenoid-operated, three-way, direct-acting, spool-type, screw-in hydraulic directional valve	Scrub Brush Solenoid (8)
S6	A solenoid-operated, two-way, normally closed, poppet-type, screw-in hydraulic cartridge valve	Squeegee Lock Up (10)
Coil	12 VDC, dual spade connectors; nominal coil resistance – 9.8 Ω	Used on S2, S3, S4, S5 and S6

Special Tools

Hydraulic test gauge w/connector, 3000 PSI range, p/n 56504516	
Flow Meter – rated at 3000 psi and 10 gal./min. (typical shown)	
Various hydraulic fittings required to connect hydraulic test gauge into hydraulic circuits	

Recovery System

Functional Description

Overview

The recovery system picks up the scrubbing solution from the floor and directs it into the recovery tank. The squeegee vacuum fan, driven by a hydraulic motor powered by the auxiliary pump, draws air from the recovery tank to create a vacuum in the tank and at the squeegee to pick up the solution. The solution travels through the squeegee hose and into the recovery tank.

The Squeegee Blade Switch on the instrument panel switches the squeegee vacuum fan motor on and off as well as extending and retracting the squeegee.

Refer to the ***Squeegee System*** section for more information on the squeegee components and operation.

Recovery Tank – Standard Recovery System

The standard **Recovery Tank** holds 100 gallons [379 liters] of wastewater and is not plumbed to the solution tank.

The **Drain Plug Assembly** plugs the drain hole to the **Drain Hose**. The **Drain Plug Assembly** uses an expanding plug that expands when the **Tee-handle** is tightened (rotated clockwise) to seal the drain hole.

The **Recovery Tank** tilts out away from the machine for easier access and for cleaning. A **Gas Spring** controls the **Recovery Tank** movement as it swings down. A chain attached to the **Recovery Tank** and machine chassis holds the **Recovery Tank** in position when it is swung down.

The **Drain Hose** is supported by the **Hose Holder** which swings out away from the machine to release the **Drain Hose** when draining the **Recovery Tank**.

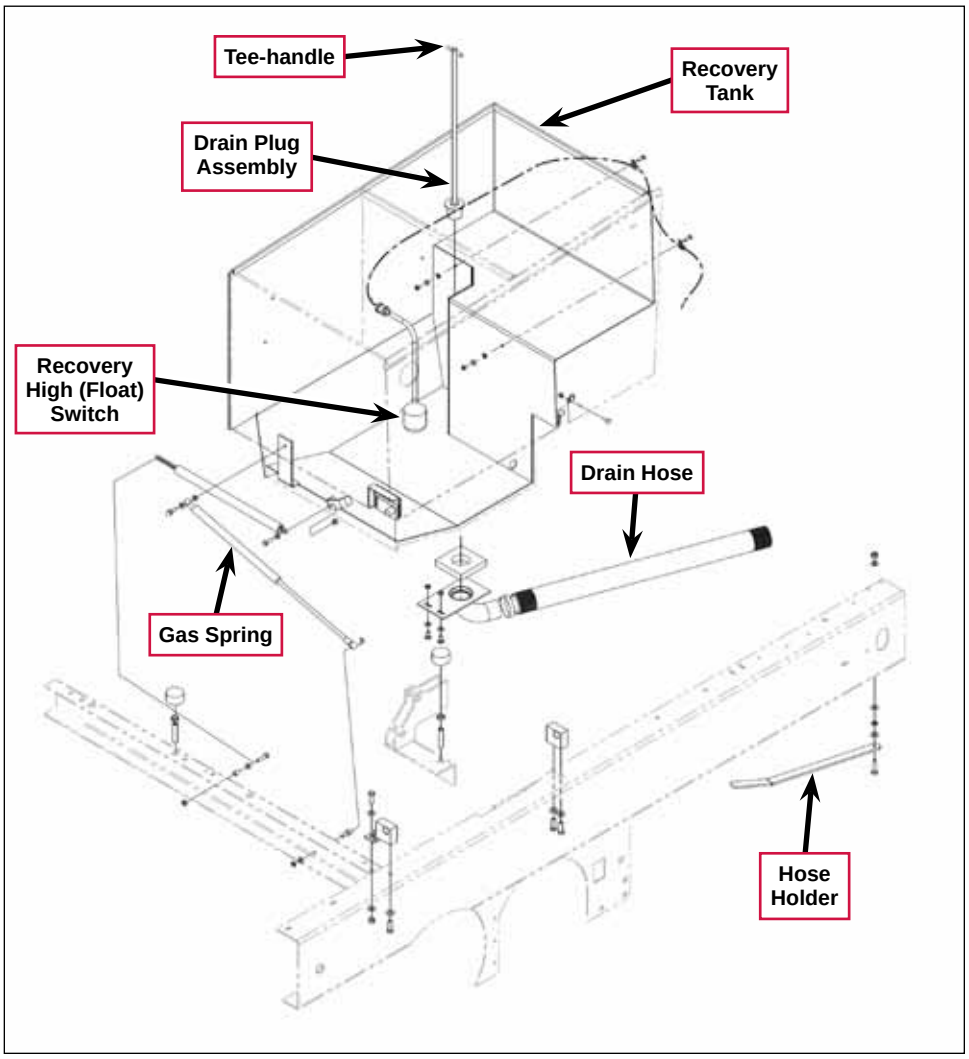

The **Recovery High (Float) Switch** will actuate the **High Recovery Warning Light** approximately five minutes before the recovery tank is full to allow time to complete the scrubbing cycle before the float ball shuts off the vacuum to the recovery tank.

High Recovery Warning Light

Recovery Tank – ESP/Recycle System

The **Recovery Tank** with the ESP/Recycle option has an additional **Solution Inlet Filter**, and supplies filtered wastewater to the **ESP Pump** that pumps it back into the solution tank.

The **ESP Pump** is controlled by the **Recovery High (Float) Switch** in the **Recovery Tank** (shown on the previous page), and will switch on when the **Recycling System ON/OFF Switch** is set to **ON** and the **Recovery High (Float) Switch** actuates the **High Recovery Warning Light**.

Also refer to the ***Solution System*** section.

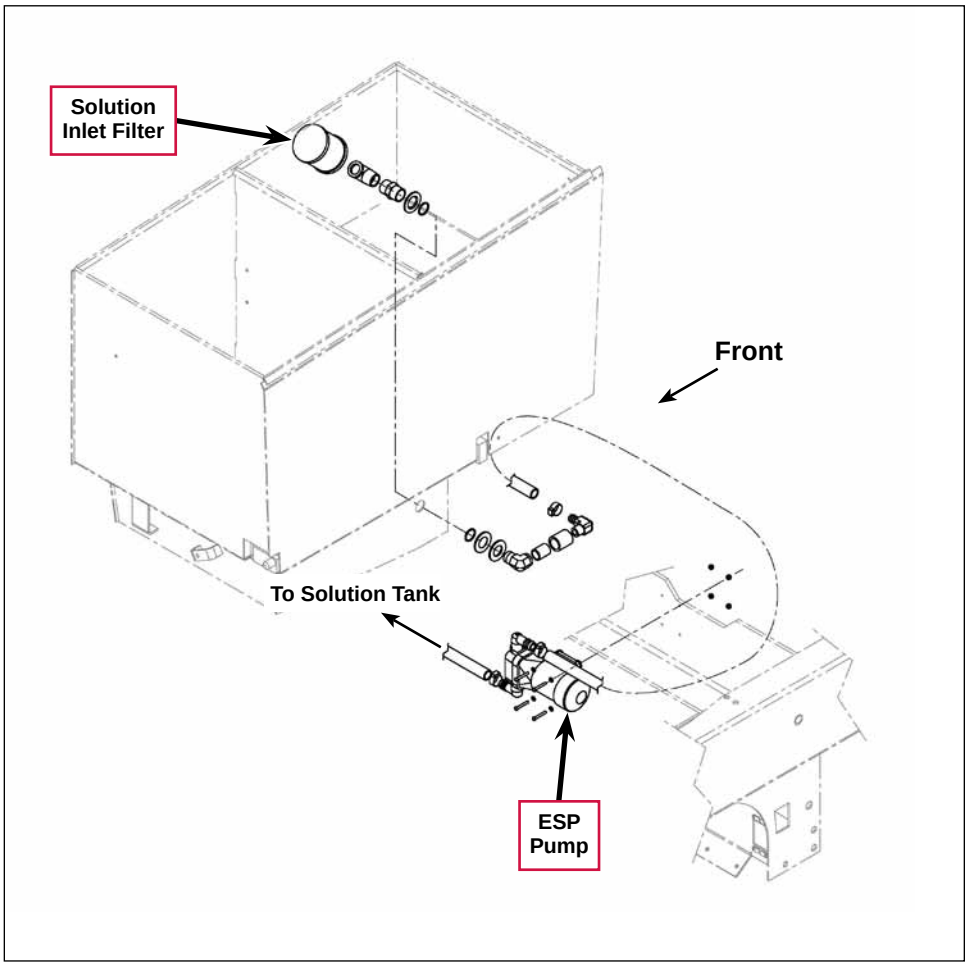

Vacuum Motor/Fan Assembly

The hydraulic **Vacuum Motor** drives the **Impeller** that spins in the **Fan Duct** to create the vacuum in the recovery tank.

The **Vacuum Motor** and fan assembly are mounted on the **Lower Cover Weldment**.

The **Vacuum Motor** assembly includes the internal relief valve and the **Solenoid Valve** that controls the oil flow to the **Vacuum Motor**.

The **Float Ball** moves up and down inside of the **Float Ball Strap**. If the water level in the recovery tank gets too high, the **Float Ball** will rise to plug the opening in the **Fan Duct** to keep water out of the **Vacuum Motor** and fan assembly.

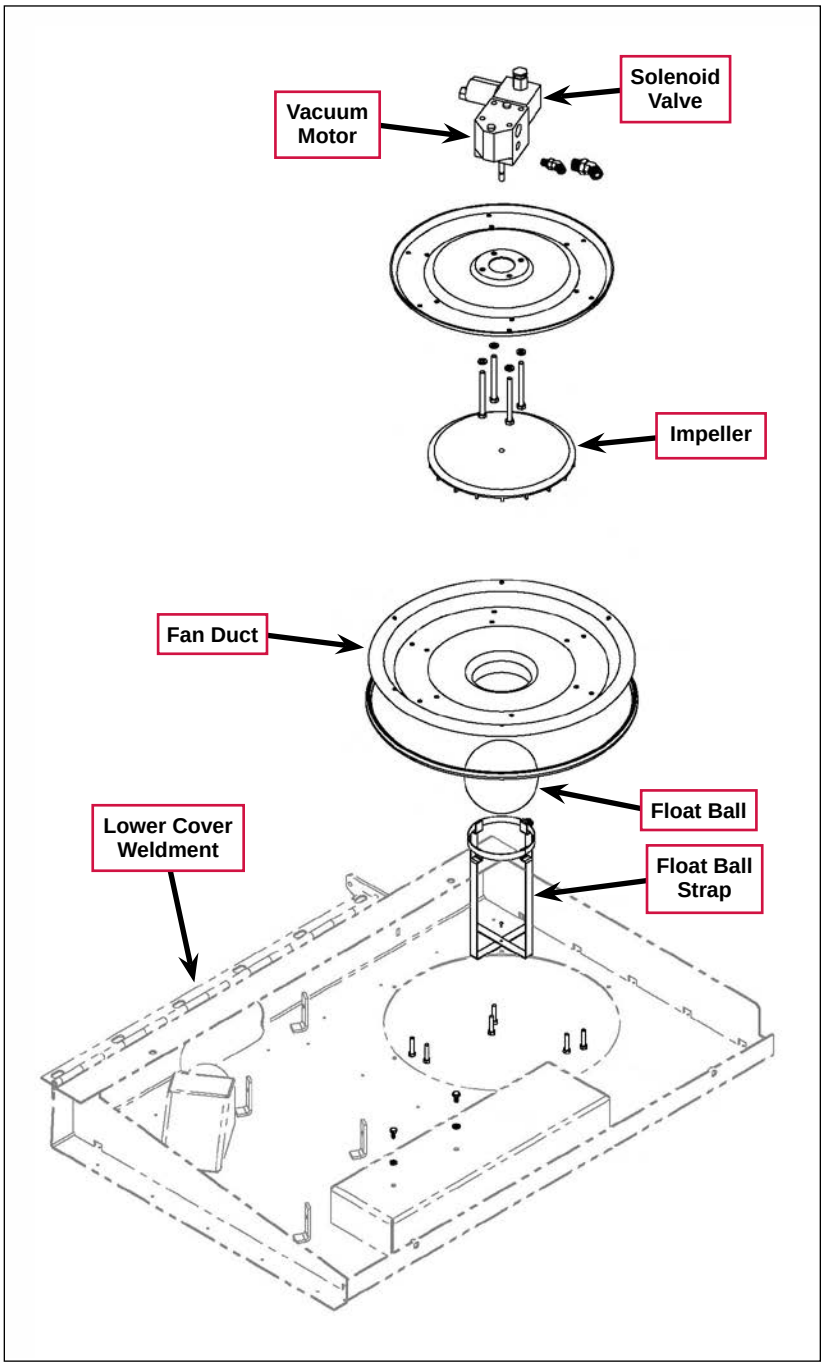

Recovery System Wiring Diagram – Standard Recovery System

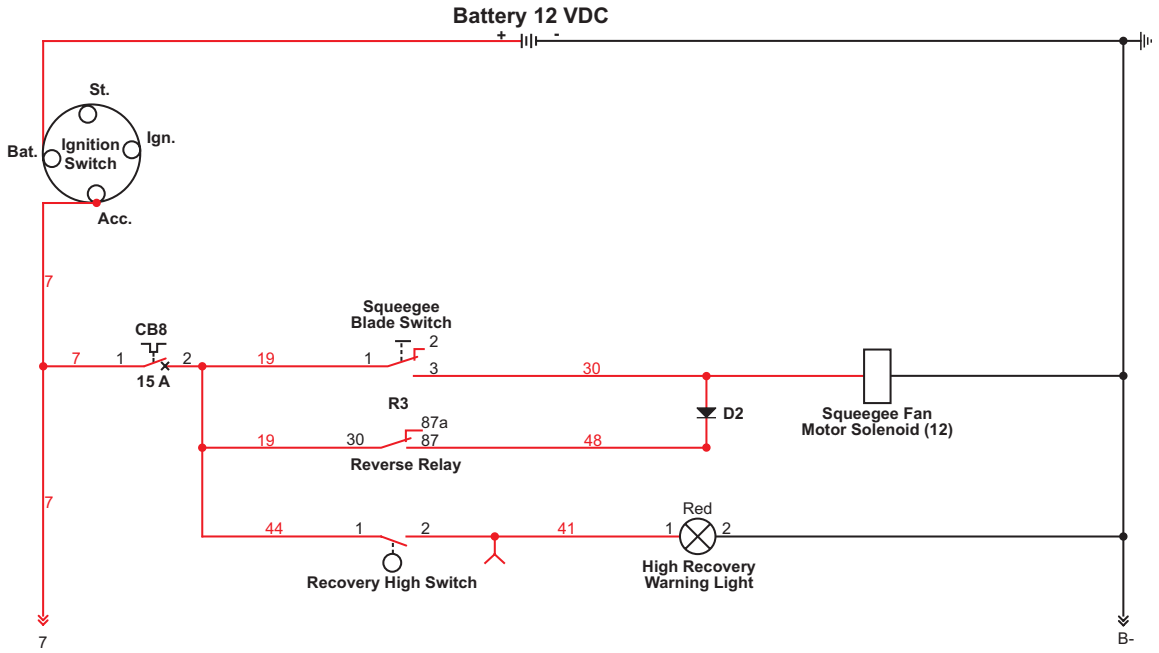

Electrical Circuit Description – Standard Recovery System

The **Squeegee Fan Motor Solenoid (12)** controls the hydraulic oil flow to the squeegee vacuum fan motor.

- When the **Squeegee Blade Switch** on the instrument panel is set to the squeegee-lower position (**Squeegee Blade Switch** position **2**), the **Squeegee Fan Motor Solenoid (12)** is de-energized (blocked) to direct the hydraulic oil to the squeegee vacuum fan motor to run the motor.
- When the **Squeegee Blade Switch** on the instrument panel is set to the squeegee-raise position (**Squeegee Blade Switch** position **3**), the **Squeegee Fan Motor Solenoid (12)** is energized (open) to allow the hydraulic oil to flow through the **Squeegee Fan Motor Solenoid (12)** and bypass squeegee vacuum fan motor.
- When the **Reverse Relay** switches to position **87**, diode **D2** prevents voltage from the **Reverse Relay** from energizing the **Squeegee Fan Motor Solenoid (12)**. This allows the squeegee vacuum fan motor to run when the machine is in reverse. (Not shown is that power from **87** is used to raise the squeegee when the machine is in reverse.)

The **Recovery High Switch** (float switch) will switch on the **High Recovery Warning Light** when the recovery tank is full.

Also refer to the ***Solution System*** section and the ***Recovery System Hydraulic Diagrams*** subsection.

High Recovery Warning Light

Recovery System Hydraulic Diagrams

Squeegee Vacuum Fan Off

When the **Squeegee Vacuum Motor** is off, the **Squeegee Fan Motor Solenoid (12)** is energized. This allows the hydraulic oil to flow from the non-priority leg on the **Auxiliary Pump** through the **Squeegee Fan Motor Solenoid**, bypassing the **Squeegee Vacuum Motor**. The hydraulic oil then returns to the **Drive Pump** charge circuit.

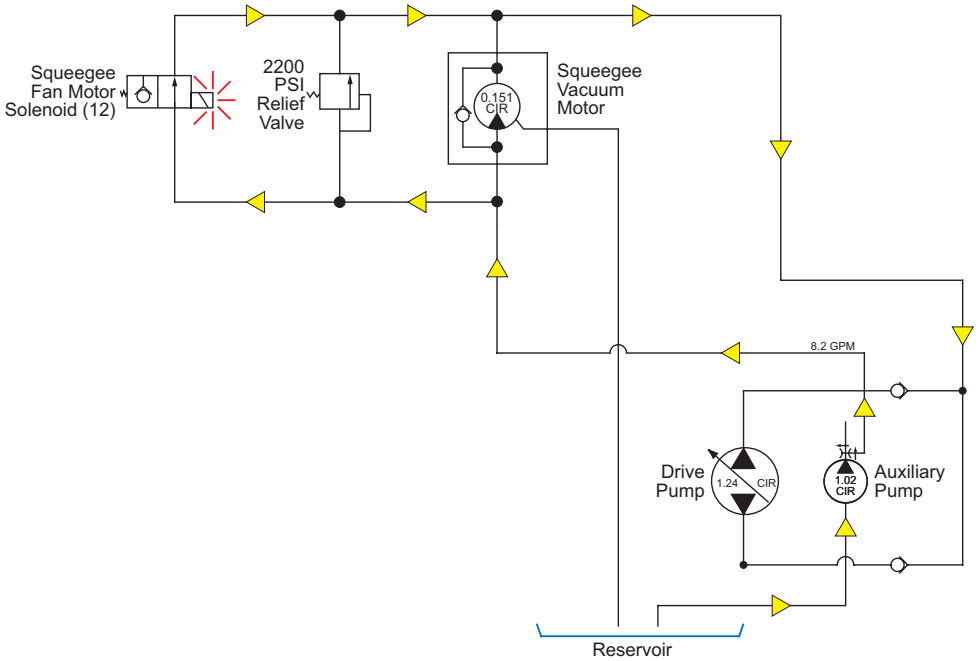

Squeegee Vacuum Fan On

When the **Squeegee Vacuum Motor** is on, the **Squeegee Fan Motor Solenoid (12)** is de-energized. This forces the hydraulic oil to flow from the non-priority leg on the **Auxiliary Pump** to the **Squeegee Vacuum Motor**. The hydraulic oil then returns to the **Drive Pump** charge circuit.

The **Case Drain** allows any oil leaked into the motor case to drain into the **Reservoir** to prevent it from building up pressure and possibly damaging the motor seals.

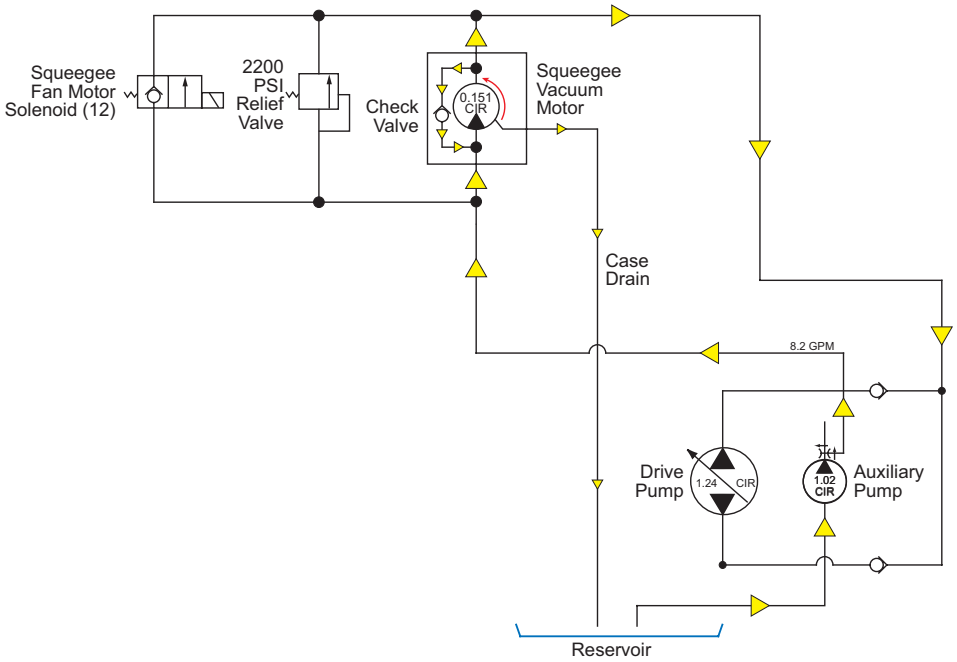

The **Check Valve** relieves the pressure in the **Squeegee Vacuum Motor** when it is shut off and allows the high-speed **Squeegee Vacuum Motor** to “coast” down and reduce its speed more gradually.

Squeegee Vacuum Fan Stalled

If the **Squeegee Vacuum Motor** stalls, the **2200 PSI Relief Valve** opens to allow the oil to flow through the **2200 PSI Relief Valve** to prevent damage to the **Squeegee Vacuum Motor** or hydraulic system.

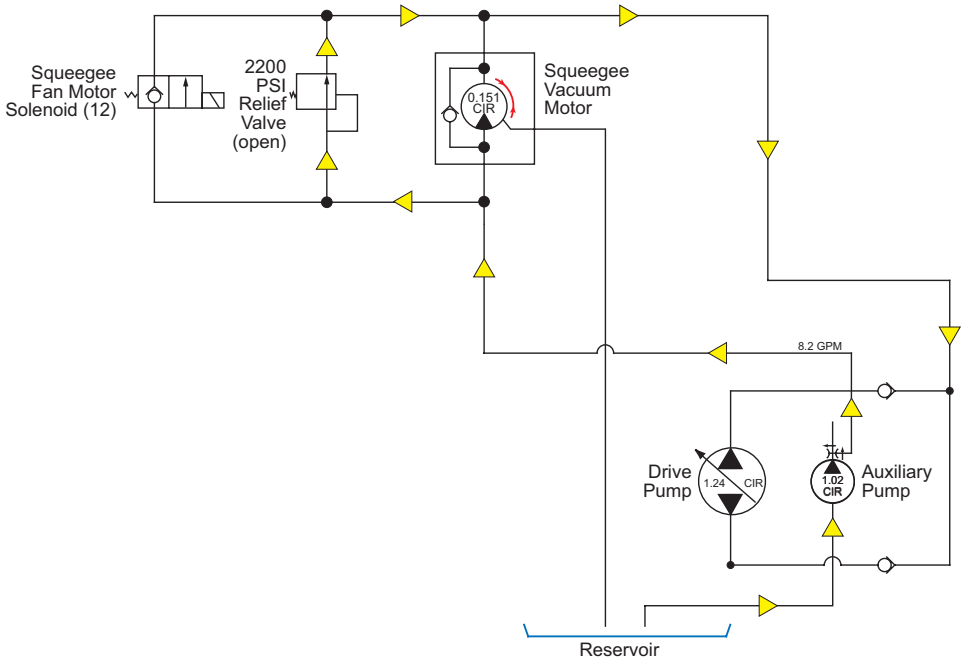

Component Locations

The following components are included in this section: Also refer to the ***Solution System*** section.

- Recovery Tank
- Drain Plug Assembly
- Drain Hose and Hose Holder
- Recovery Tank Lid
- Recovery High (Float) Switch
- Vacuum Motor and Fan Assembly

Recovery Tank

The **Recovery Tank** is located on the front left-hand side of the machine and swings out away from the machine for access and cleaning.

The **Recovery Tank Lid** (cover assembly) houses the vacuum motor assembly, and swings up for access to the **Recovery Tank**, **Float Ball** and **Float Ball Strap**.

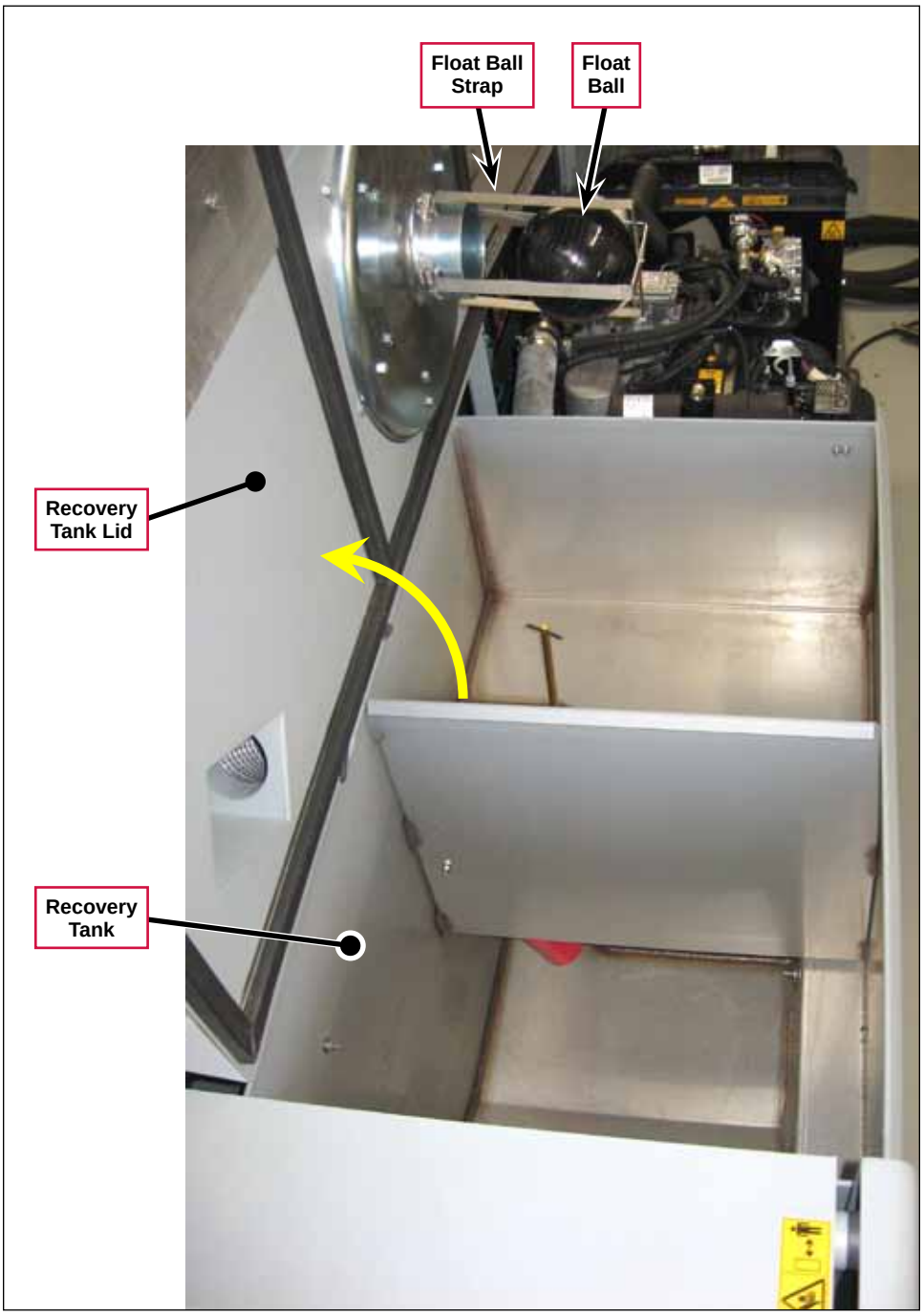

The **Drain Plug Assembly** can be removed to drain the **Recovery Tank** through the **Drain Hose**.

The red **Recovery High (Float) Switch** will actuate the High Recovery Warning Light on the instrument panel approximately five minutes before the recovery tank is full, and before the **Float Ball** shuts off the vacuum to the recovery tank.

High Recovery Warning Light

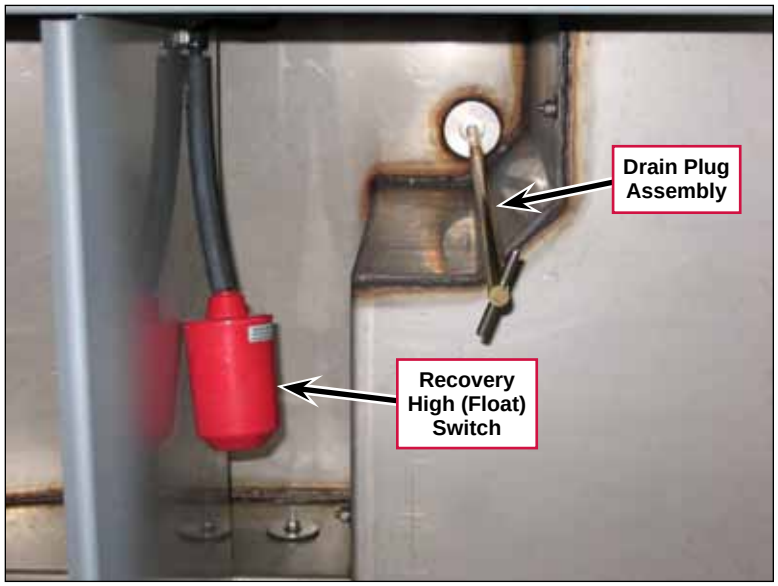

The **Hose Holder** and **Drain Hose** swing out to free the **Drain Hose** when draining the recovery tank.

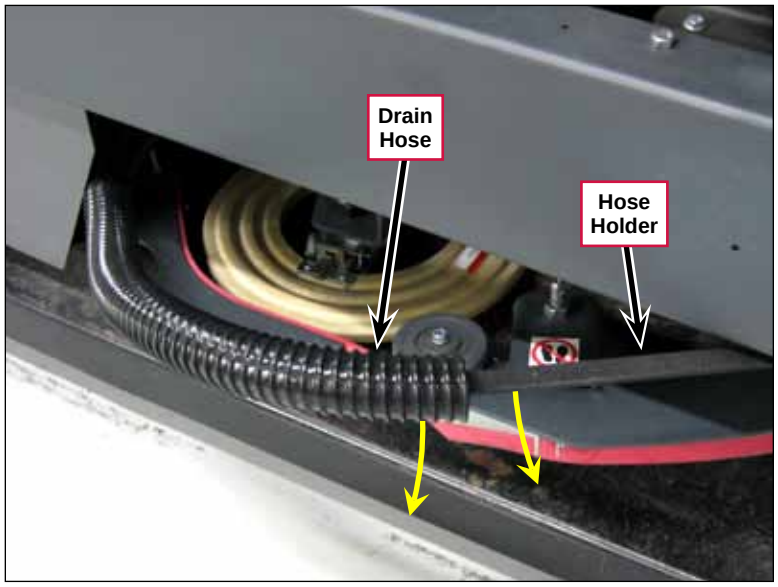

The **Vacuum Motor** and **Fan Assembly** are mounted on the **Recovery Tank Lid**. The **Recovery Tank Lid** swings open to allow access to the **Float Ball** and **Float Ball Strap**.

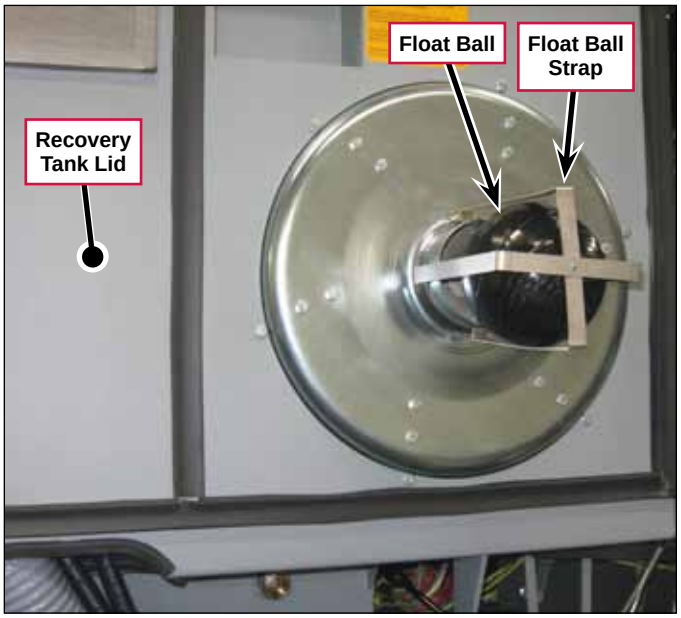

Removing the upper cover weldment allows access to the **Vacuum Motor**, attached **Solenoid Valve** and **Relief Valve**, and the **Fan Assembly**. This also allows access to the **Hydraulic Hoses** and the **Vacuum Hose**.

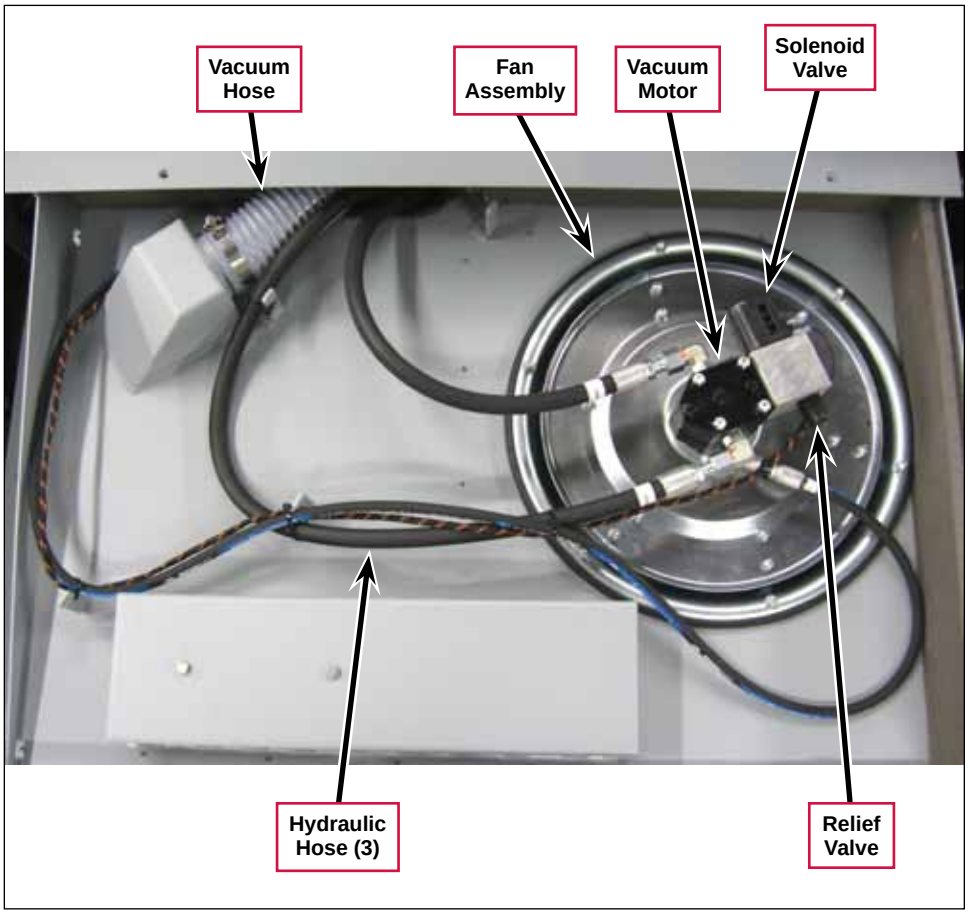

Maintenance

Warning! ***Before performing any machine maintenance, make sure the key switch is off, the key is removed from the machine and the parking brake is engaged.***

Daily Maintenance

- Check the gasket on the recovery tank cover for damage/wear.
- Check the vacuum hose for leaks or cracks.

Recovery Tank

To clean the recovery tank:

1. Lift the recovery tank lid (cover).
2. Tilt the recovery tank out away from the machine.
3. Flush all deposits from the tank.
4. Flush the float switch (standard solution systems) and the solution inlet filter (ESP/Recycle option only).

Note: *The solution inlet filter is threaded into the bottom of the tank and is designed to be removed and installed with an oil filter wrench.*

Troubleshooting

Problem	Cause	Correction
Poor water pickup.	Vacuum leak(s) due to: • Leaky vacuum hose. • Bad recovery tank lid gasket. • Drain plug not installed correctly. • Damaged tank.	• Check the squeegee vacuum hose and tighten/ replace as necessary. • Check the recovery tank lid gasket and replace as necessary. • Make sure drain plug is installed correctly. • Check the recovery tank for damage.
	Restrictions due to built-up debris in the squeegee tool or vacuum hose.	• Check the squeegee tool and vacuum hose for any accumulated dirt or debris and clean as necessary. • Check the vacuum system airflow pathway wherever the airflow is forced to make a sharp turn for any accumulated dirt or debris and clean as necessary.
	Squeegee blades worn or out of adjustment.	• Check and replace the squeegee blades if necessary. • Readjust the squeegee as necessary. (Refer to the Rear Squeegee section in the Instructions For Use).

Problem	Cause	Correction
Squeegee vacuum fan motor not running.	Circuit breaker CB8 is tripped.	Reset the circuit breaker.
	Squeegee fan motor solenoid valve not operating correctly.	• Check the wiring from the Squeegee Blade Switch to the fan motor solenoid valve. There should be 0 volts to the solenoid when the fan motor is on and 12 VDC to the solenoid when the fan motor is off. • Check the solenoid coil resistance. If not 6.6 ohms ±10% , replace the solenoid. Also see the ***Recovery System Wiring Diagram***.

Vacuum Test

1. Remove the rear squeegee assembly from the **Squeegee Support Weldment**.
2. Block the **Squeegee Support Weldment**.
3. Install the **Vacuum Test Gauge** into the **Hose**.
4. Start the engine and switch the squeegee blade switch to the “lower” position. The **Vacuum Test Gauge** should read 30 inches of water or higher.

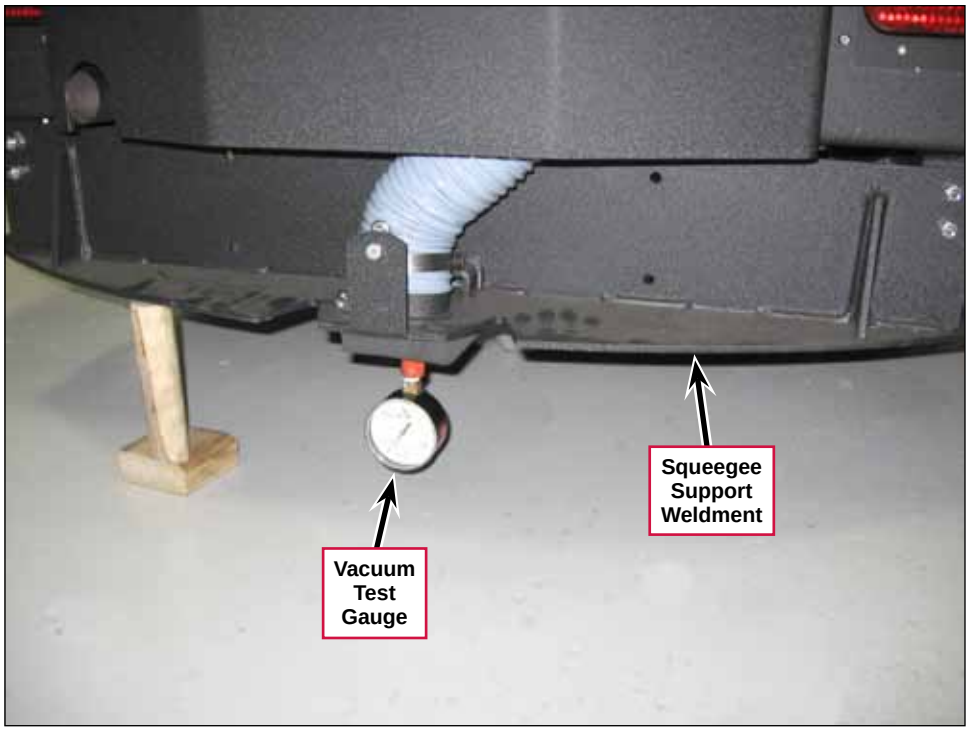

Specifications

Component	Specifications
Squeegee Vacuum Fan Motor	Displacement – 0.000652 gal/rev; 0.151 CIR
	Max. Pressure – 1500 psi [103.4 bar]
	Max. Speed – 4000 RPM
	Relief Valve – 2200 psi [151.7 bar]
Vacuum Water Lift (Sealed)	30” [76 cm] of water
Squeegee Fan Motor Solenoid (12)	Nominal Coil Resistance – 6.6 Ohms (measured)

Special Tools

Vacuum water lift gauge, p/n 56205281

Scrub System

Functional Description

Overview

The scrub system includes the scrub deck, the three hydraulic scrub brush motors, the scrub deck hydraulic cylinder that lowers and raises the deck, and the associated hydraulic solenoid valves. One of the 1.02 CIR auxiliary pumps powers the scrub brush motors. The other 1.02 CIR auxiliary pump powers the scrub deck hydraulic cylinder.

Scrub Deck

The three **Hydraulic Scrub Motors** are mounted on the **Scrub Deck** and power the **Drive Brush Assemblies**. The **Brushes** snap into the latches on the **Drive Brush Assemblies**.

The ball valve regulates the solution flow to the **Water Feed Hose** connected to the **90° Nipple** on the **Tee Fitting**. The three other **Water Feed Hoses** supply the solution to the **Brushes**.

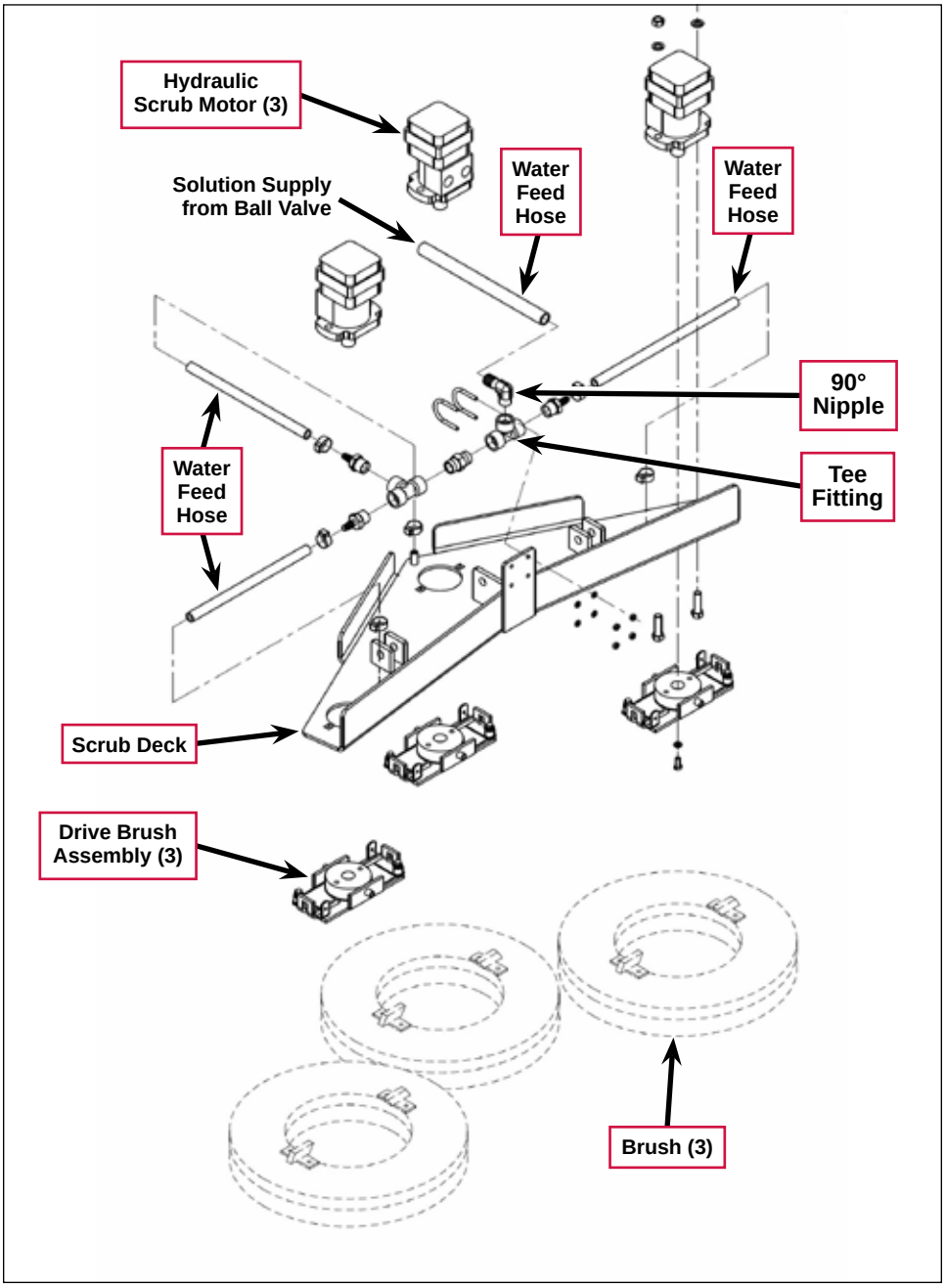

Scrub Brush Motor Control Valves

The **Normal Rotation Brush (4)** and **Reverse Rotation Brush (3)** solenoid valves on the **Main Control Valve** control the hydraulic oil to the scrub brush motors from **Port 3** or **Port 4** depending on the direction of the scrub brush motors. The oil returns from the motors to **Port 3** or **Port 4** depending on the direction of the scrub brush motors.

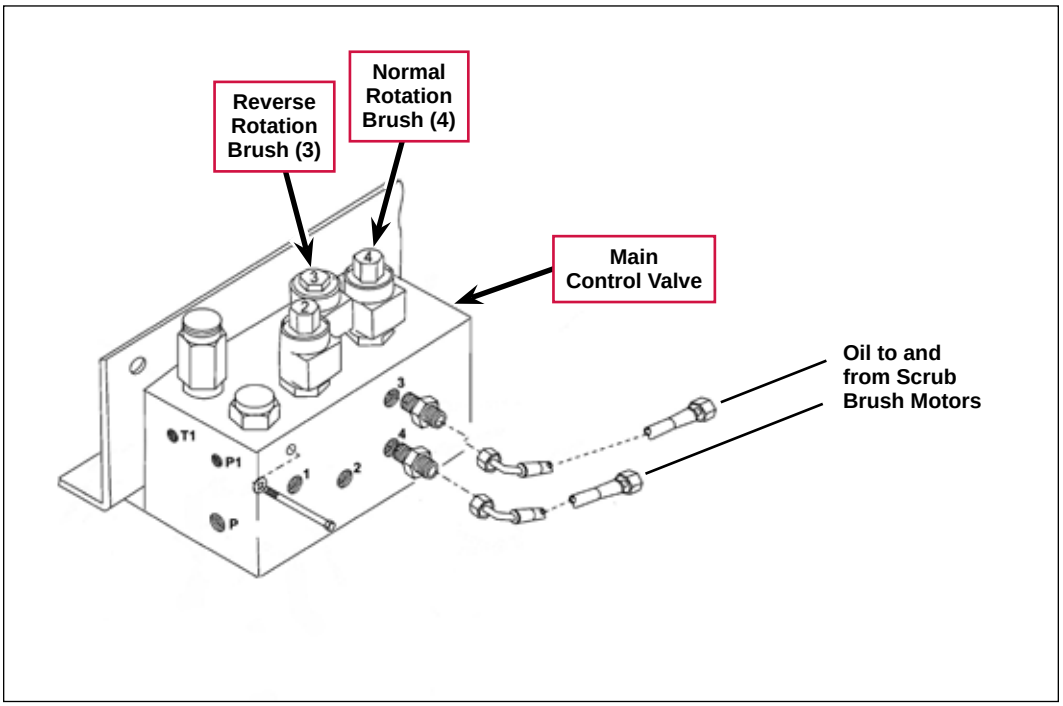

Scrub Deck Hydraulic Cylinder and Control Valves

The **Scrub Deck Hydraulic Cylinder** lowers and raises the scrub deck. **Scrub Brush Solenoid (6)** and **Scrub Brush Solenoid (8)** in the **Cylinder Control Valve** raise and lower the scrub deck and control the two scrub pressures. The **Scrub Brush Lock Up Solenoid (9)** holds the scrub deck up when the engine is shut off.

The top port on the **Scrub Deck Hydraulic Cylinder** is connected to the **C2 Port** on the **Cylinder Control Valve**. The bottom port on the **Scrub Deck Hydraulic Cylinder** is connected to the **C1 Port** on the **Cylinder Control Valve**.

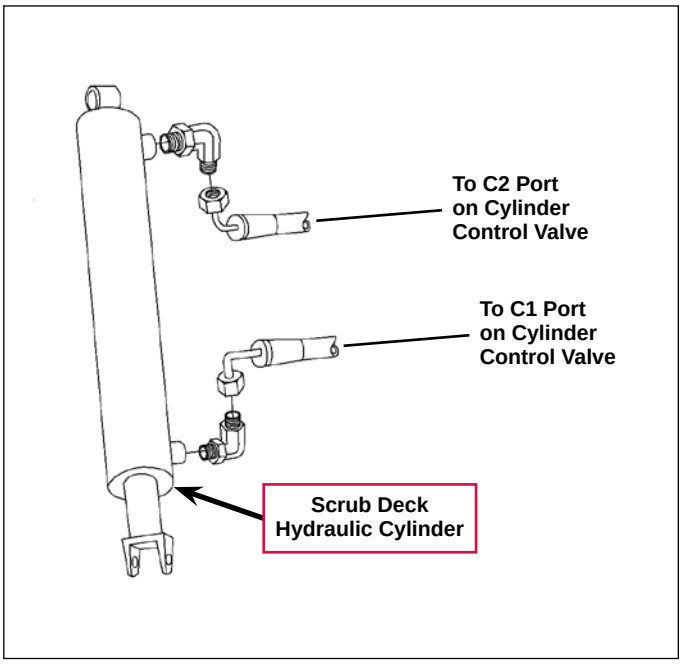

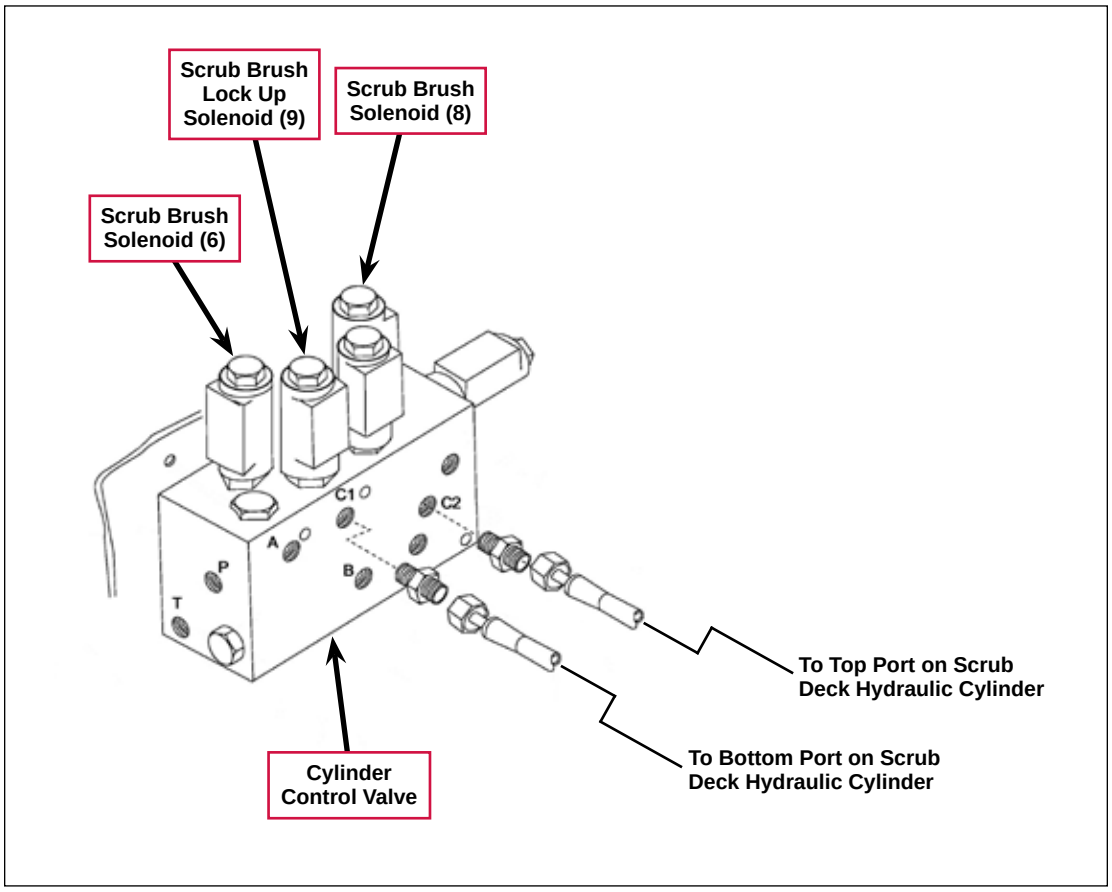

Scrub System Wiring Diagram

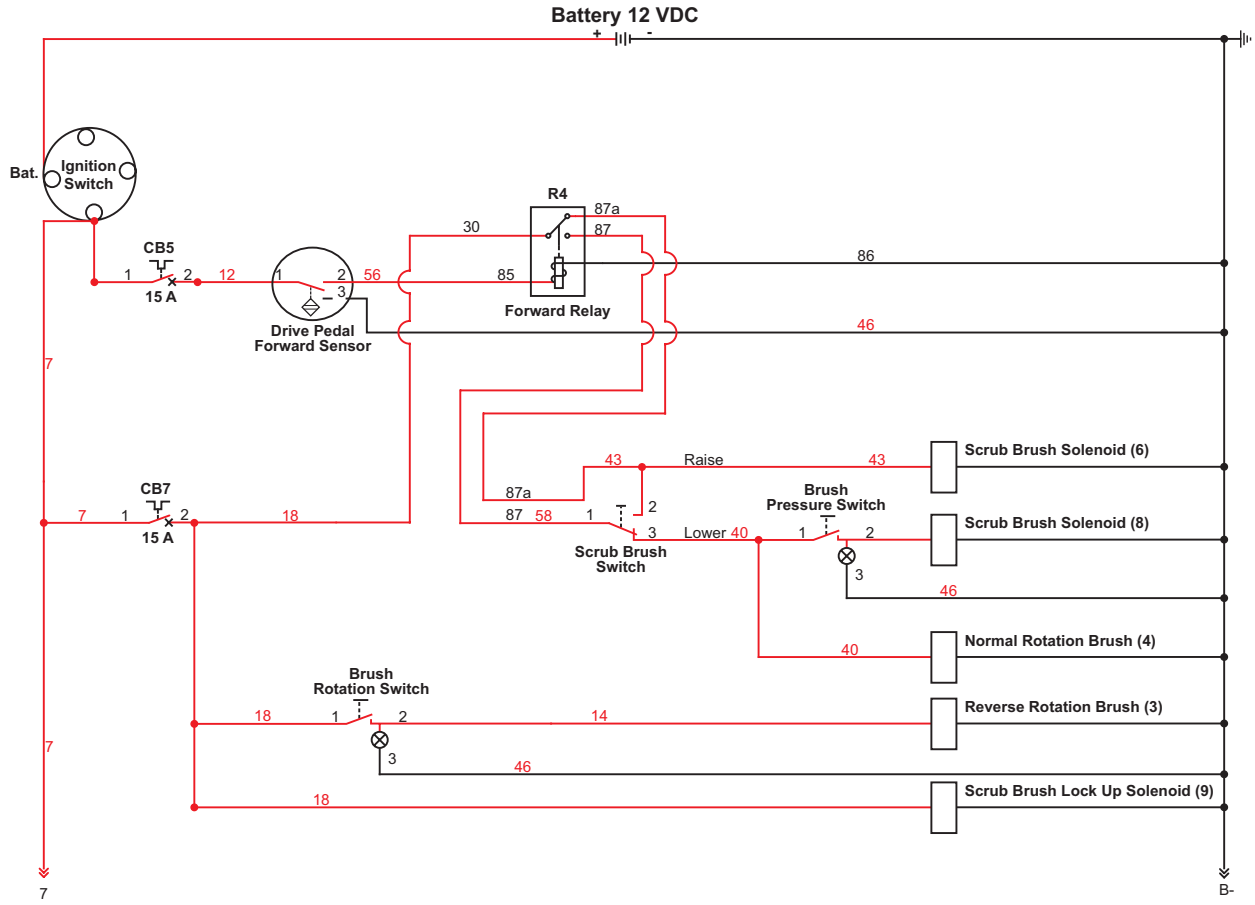

Circuit Descriptions

Scrub Brush Motors

The **Normal Rotation Brush (4)** solenoid valve in the main control valve controls the oil flow to the scrub brush motors. The scrub brush motors will run when the **Ignition Switch** is on, the **Drive Pedal Forward Sensor** switches to position **2** to energize the **Forward Relay R4** coil, the **Forward Relay R4** contacts switch to the **87** (**Lower**) position and the **Scrub Brush Switch** on the instrument panel is switched on.

The **Brush Rotation Switch** on the instrument panel controls the **Reverse Rotation Brush (3)** solenoid valve which controls the rotational direction of the scrub brush motors.

- When the **Brush Rotation Switch** is set to the top (forward) position, the **Reverse Rotation Brush (3)** solenoid is de-energized to allow the scrub brush motors to run in the normal (forward) direction.
- When the **Brush Rotation Switch** is set to the bottom (reverse) position, the **Reverse Rotation Brush (3)** solenoid is energized and reverses the direction of the oil flow to the scrub brushes. This runs the scrub brushes in reverse and lights the **Brush Rotation Switch**.

Also refer to the ***Scrub System Hydraulic Diagrams*** section.

Scrub Deck Cylinder

The **Scrub Brush Solenoid (6)**, **Scrub Brush Solenoid (8)** and **Scrub Brush Lock Up Solenoid (9)** in the cylinder control valve control the scrub deck hydraulic cylinder to lower and raise the scrub deck, and determine which of the two scrub pressures is used. The **Ignition Switch** must be on for the scrub deck cylinder to lower and raise the scrub deck.

- **Scrub Deck Down at Normal Scrub Pressure**

  When the **Ignition Switch** is on, the **Scrub Brush Lock Up Solenoid (9)** is energized. This connects both ports on the scrub deck cylinder with the hydraulic return line to the reservoir. The equal pressure on both ends of the scrub deck cylinder allows the scrub deck to lower to the floor under its own weight.

- **Scrub Deck Down at High Scrub Pressure**

  When the **Drive Pedal Forward Sensor** switches the **Forward Relay R4** contacts to the **87** (**Lower**) position, the **Scrub Brush Switch** is set to the **Lower** position and the **Brush Pressure Switch** is set to the heavy scrub (“two-bar”) position, the **Scrub Brush Lock Up Solenoid (9)** and **Scrub Brush Solenoid (8)** are energized. This connects the top port on the scrub deck cylinder to the 270 psi oil from the power steering unit. This presses the scrub deck downward to its heavy scrub pressure setting. Note that the **Brush Pressure Switch** will light when in the heavy scrub (“two-bar”) position.

- **Scrub Deck Up**

  When the **Drive Pedal Forward Sensor** switches the **Forward Relay R4** contacts to the **87a** (**Raise**) position, the **Scrub Brush Solenoid (6)** will be energized and the **Scrub Brush Solenoid (8)** will be de-energized. This connects the bottom port on the scrub deck cylinder to the 270 psi oil from the power steering unit to lift the scrub deck upward to its retracted position.

Also refer to the ***Scrub System Hydraulic Diagrams*** section.

Scrub System Hydraulic Diagrams

Scrub Brush Motors Off

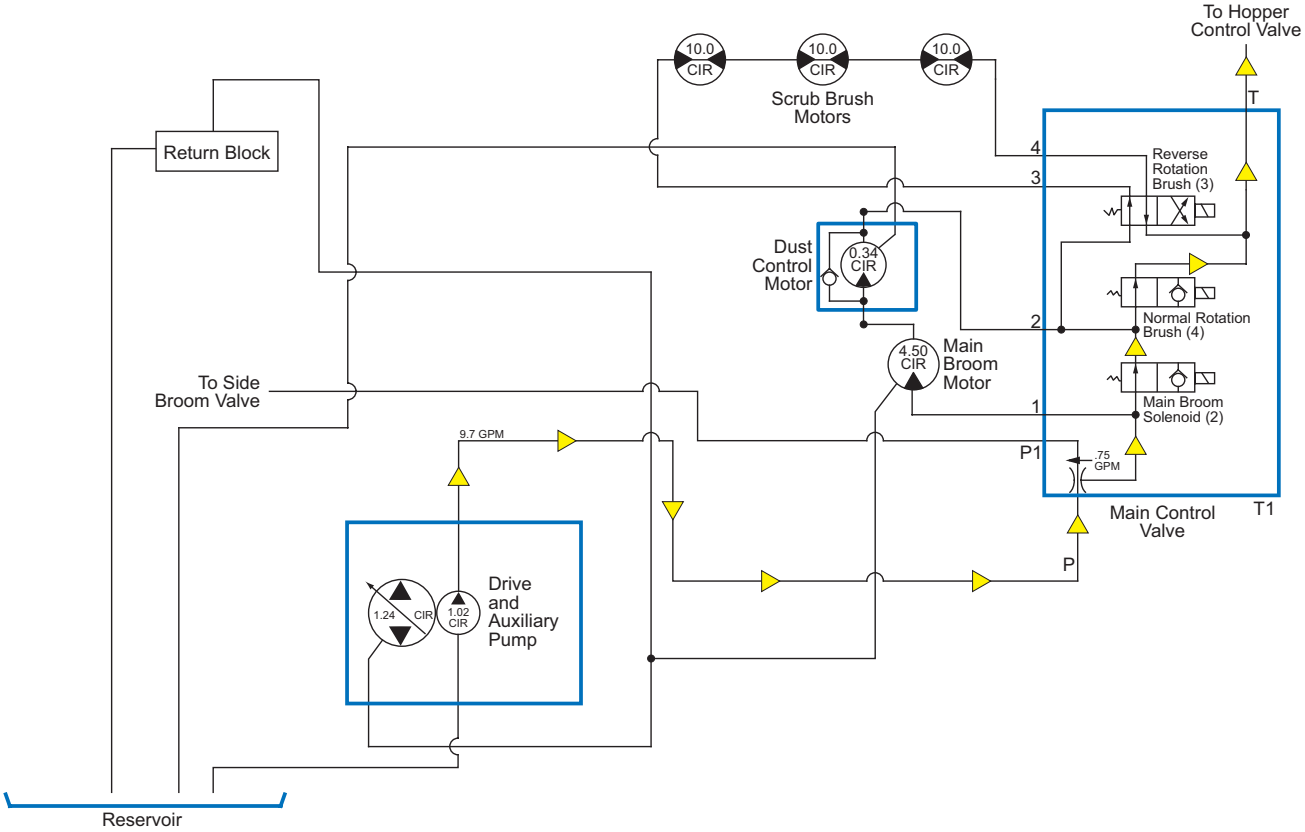

When the **Scrub Brush Motors** are off, the **Normal Rotation Brush (4)** solenoid is de-energized (open). This allows the hydraulic oil to flow from the **Auxiliary Pump**, through non-priority leg of the priority flow divider and through the **Normal Rotation Brush (4)** solenoid valve.

- If the Main Broom Switch is off, the **Main Broom Solenoid (2)** is de-energized (open). The oil will flow through the **Main Broom Solenoid (2)** valve and **Normal Rotation Brush (4)** solenoid valve, then go to the **Hopper Control Valve**.

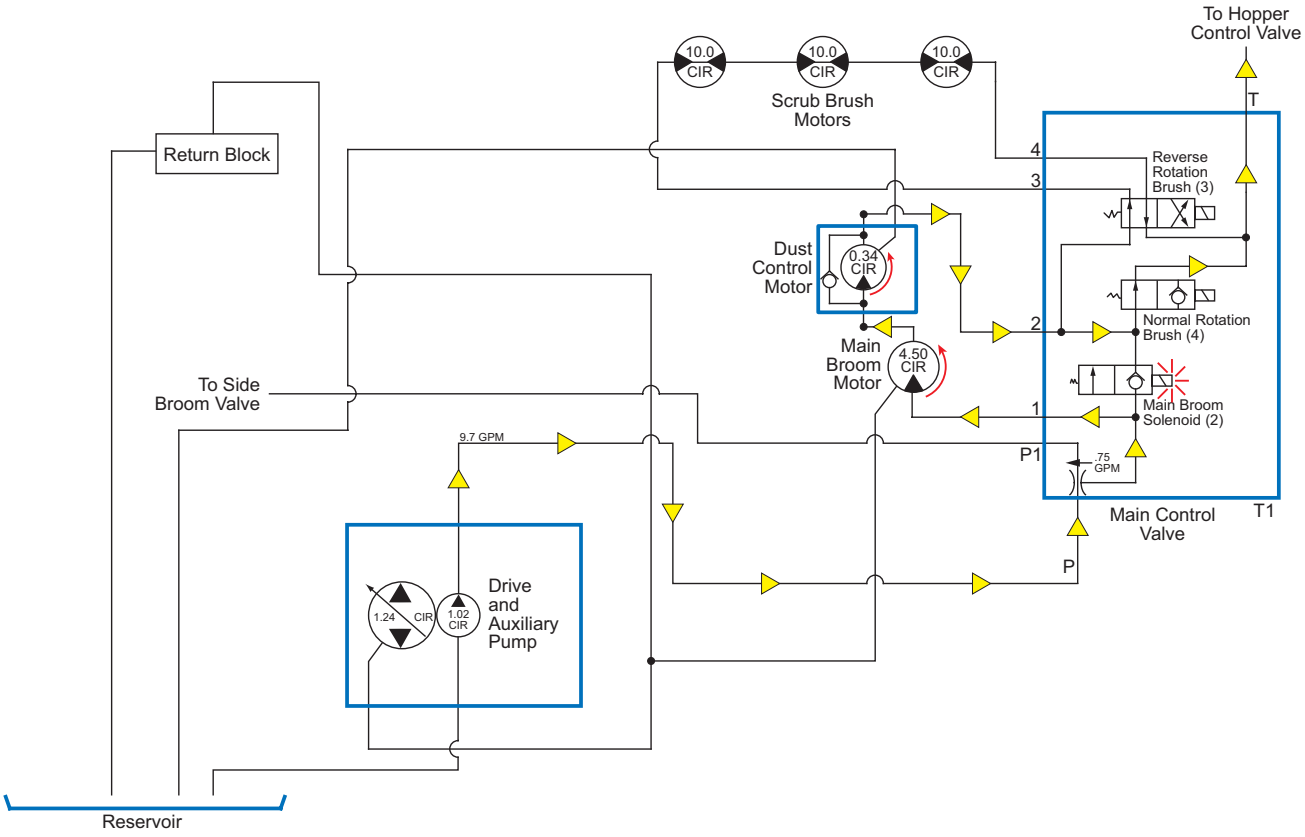

- If the Main Broom Switch is on, **Main Broom Solenoid (2)** is energized (closed). The oil will flow through the **Main Broom Motor** and **Dust Control Motor**, then through the **Normal Rotation Brush (4)** solenoid valve and on to the **Hopper Control Valve**.

In either of these two cases, the oil will flow through the open **Normal Rotation Brush (4)** solenoid valve and bypass the **Scrub Brush Motors**.

Scrub Brush Motors On

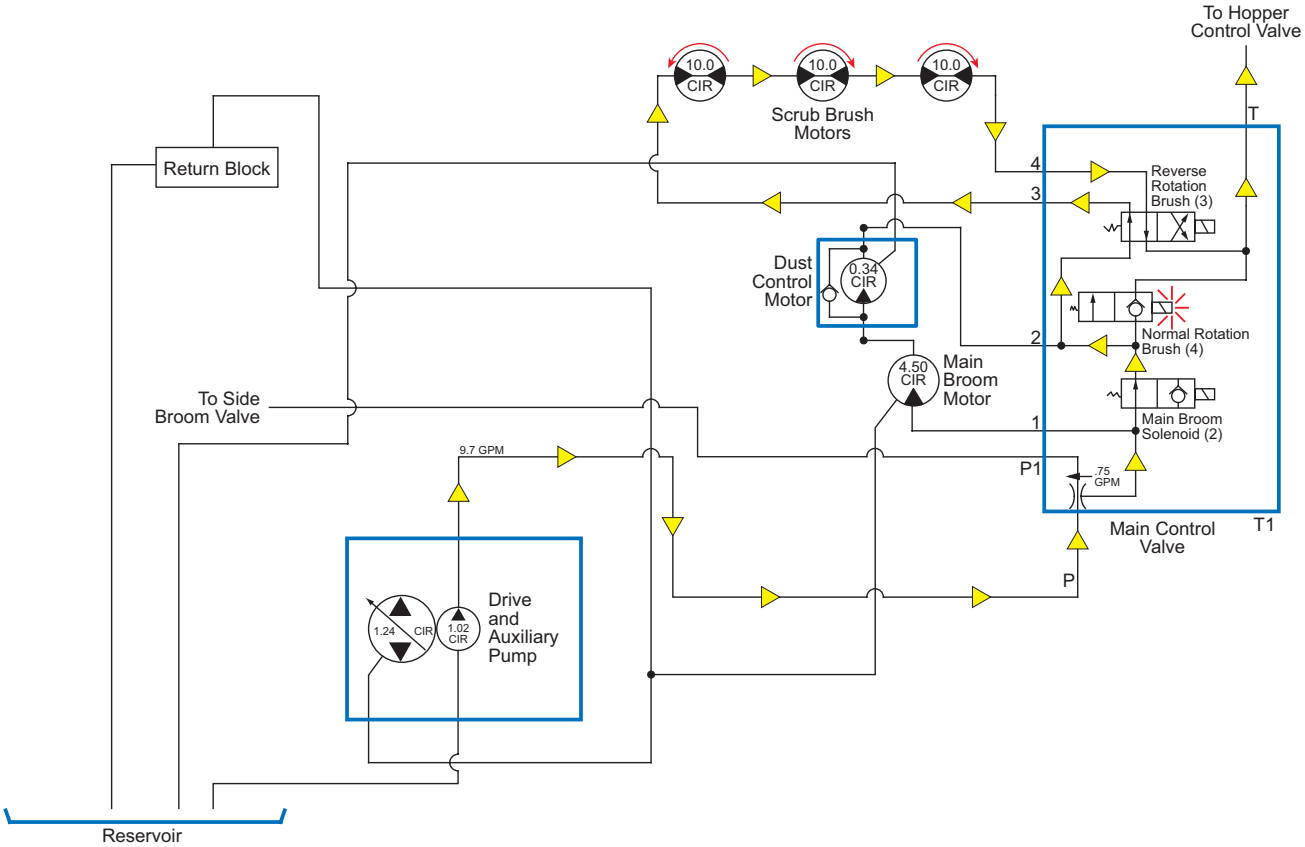

When the **Scrub Brush Motors** are on, the **Normal Rotation Brush (4)** solenoid is energized (closed). This forces the hydraulic oil to flow from the **Auxiliary Pump**, through non-priority leg of the priority flow divider, then through the **Reverse Rotation Brush (3)** solenoid valve to the **Scrub Brush Motors**.

- If the **Main Broom Motor** is off (**Main Broom Solenoid (2)** valve is open), the oil will flow through the **Main Broom Solenoid (2)** valve to the **Reverse Rotation Brush (3)** solenoid valve, then to the **Scrub Brush Motors**.

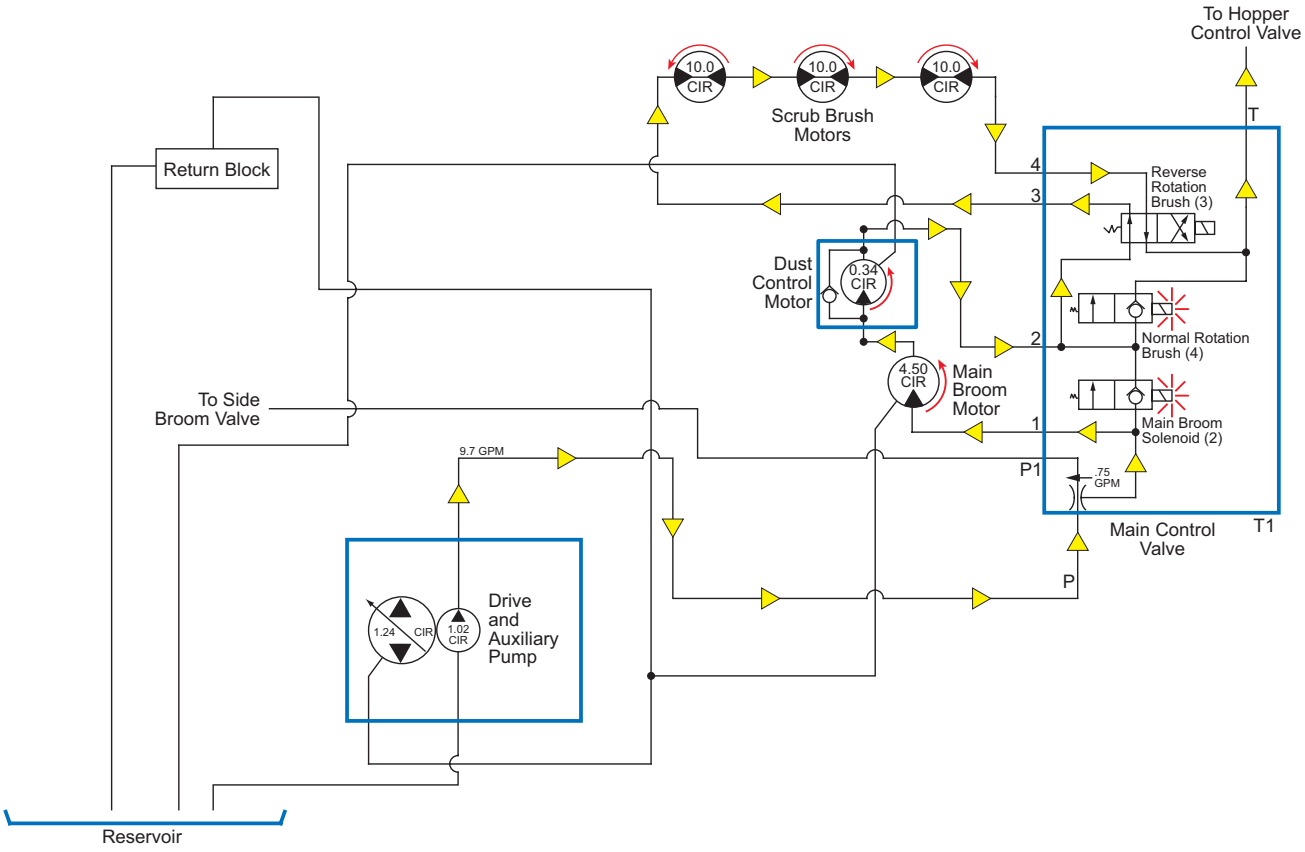

- If the **Dust Control Motor** and/or **Main Broom Motor** is on (**Main Broom Solenoid (2)** closed), the oil will flow through the **Main Broom Motor** and **Dust Control Motor** to the **Reverse Rotation Brush (3)** solenoid valve, then to the **Scrub Brush Motors**.

In either of these two cases, the oil from the discharge side of the **Scrub Brush Motors** will pass though the **Reverse Rotation Brush (3)** solenoid valve again, then go to the **Hopper Control Valve**.

Scrub Brush Motors Running in Reverse

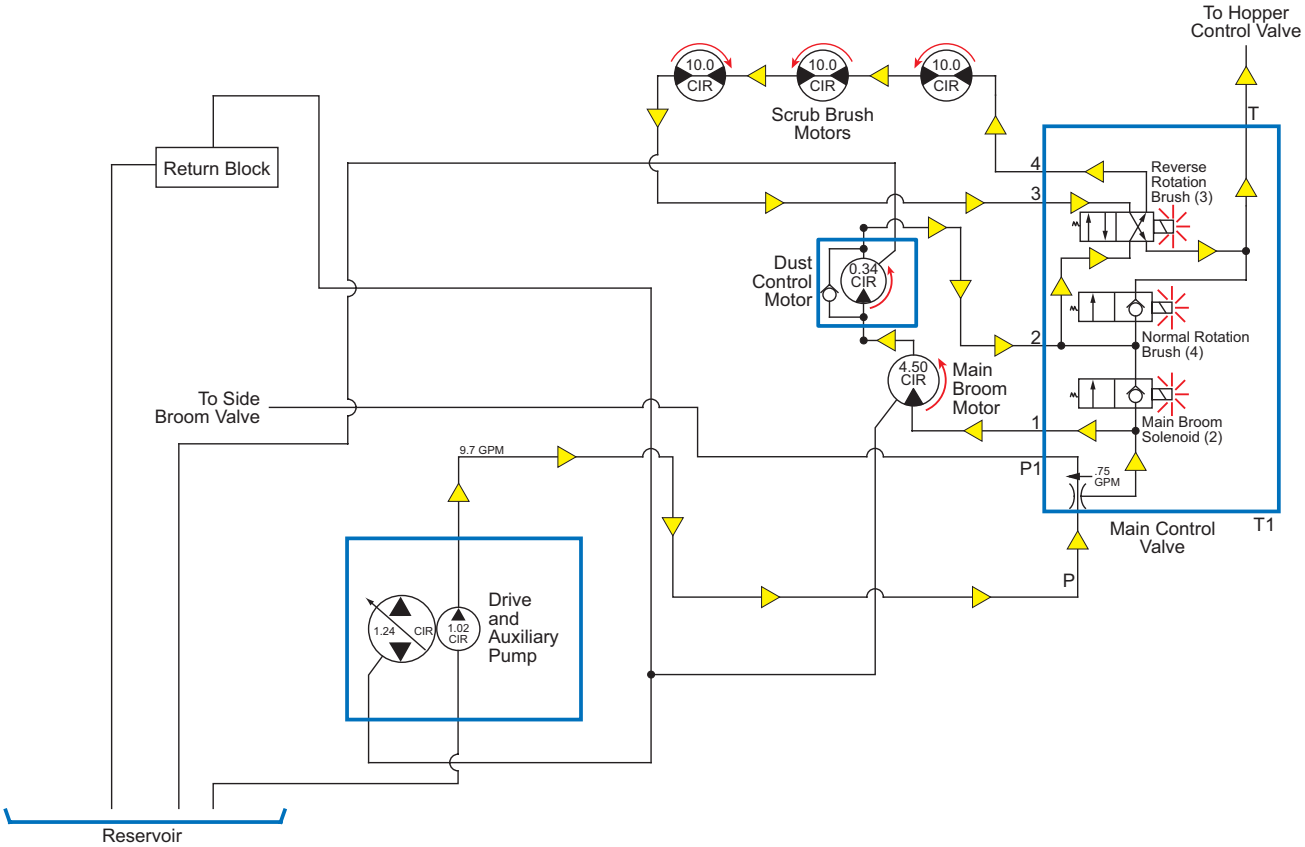

When the Brush Rotation Switch on the instrument panel is set to the bottom (reverse) position, it energizes the **Reverse Rotation Brush (3)** solenoid which reverses the oil flow to the **Scrub Brush Motors**.

Scrub Deck Down at Normal Scrub Pressure

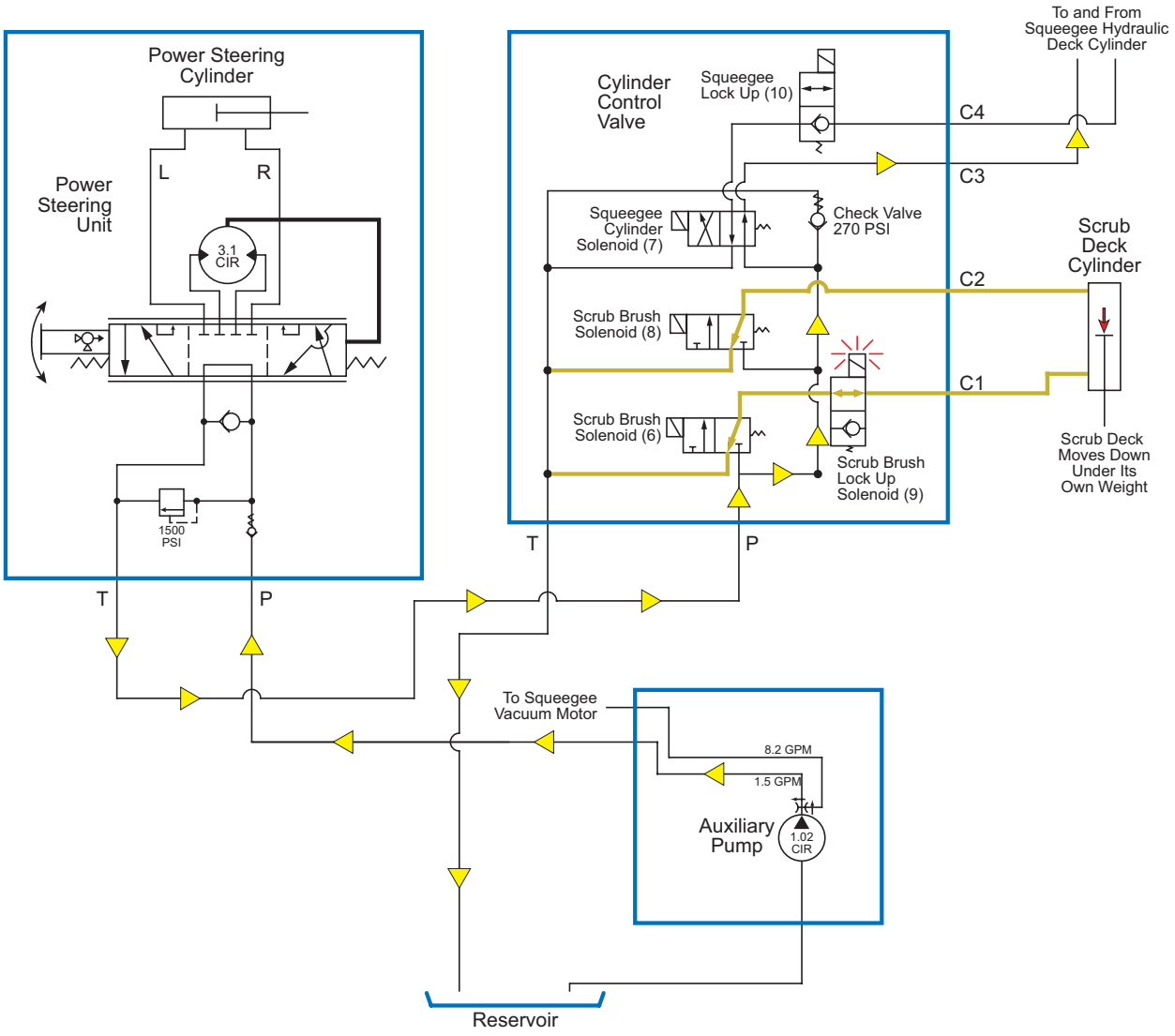

When the Scrub Brush Lift Switch is set to the down position and the Brush Pressure Switch is set to the upper (normal-pressure) position, the **Scrub Brush Lock Up Solenoid (9)** will be energized. This allows the oil to flow freely to and from both the top and bottom ports on the **Scrub Deck Cylinder**. Because both ports on the **Scrub Deck Cylinder** are connected to the return line to the **Reservoir**, this effectively creates equal pressure on both ends of the **Scrub Deck Cylinder**. This allows the scrub deck to move downward under its own weight.

Note that both the **Scrub Brush Solenoid (6)** and **Scrub Brush Solenoid (8)** valves are “deadheaded” when not energized, directing the oil from the discharge side of the **Power Steering Unit** to the **Squeegee Cylinder Solenoid (7)** valve. The **Check Valve** maintains the circuit pressure at 270 psi.

Scrub Deck Down at High Scrub Pressure

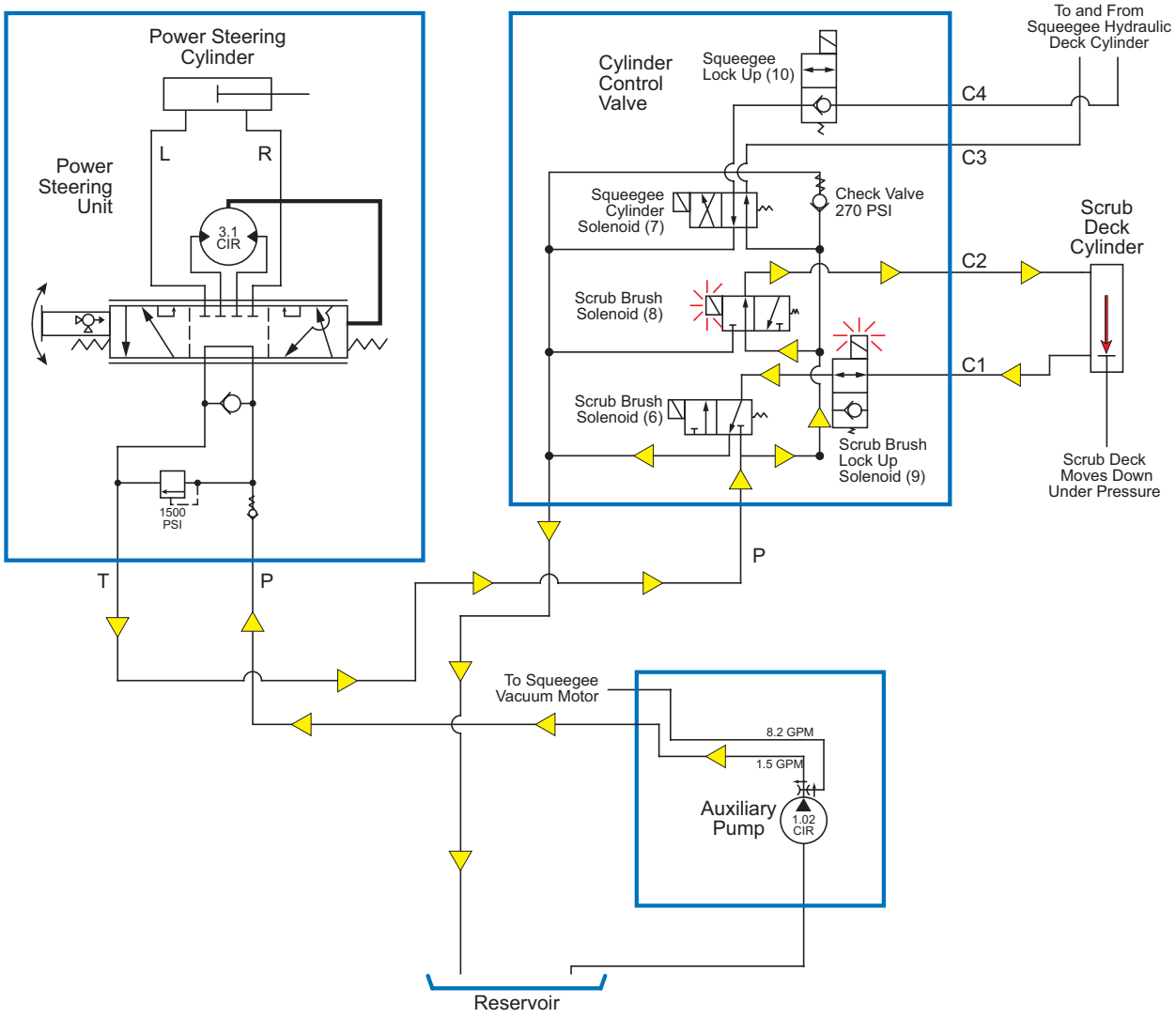

When the Scrub Brush Lift Switch is set to the down position and the Brush Pressure Switch is set to the lower (high-pressure) position, the **Scrub Brush Lock Up Solenoid (9)** and **Scrub Brush Solenoid (8)** will be energized. This allows the oil to flow from the discharge side of the **Power Steering Unit** through the **Scrub Brush Solenoid (8)** valve, then to the upper port on the **Scrub Deck Cylinder**. This forces the scrub deck down to the heavy scrub pressure. The **Check Valve** maintains the circuit pressure at 270 psi.

The oil from the lower port on the **Scrub Deck Cylinder** has a open path through the energized **Scrub Brush Lock Up Solenoid (9)** valve and the de-energized **Scrub Brush Solenoid (6)** valve to the return line to the **Reservoir**.

Scrub Deck Up

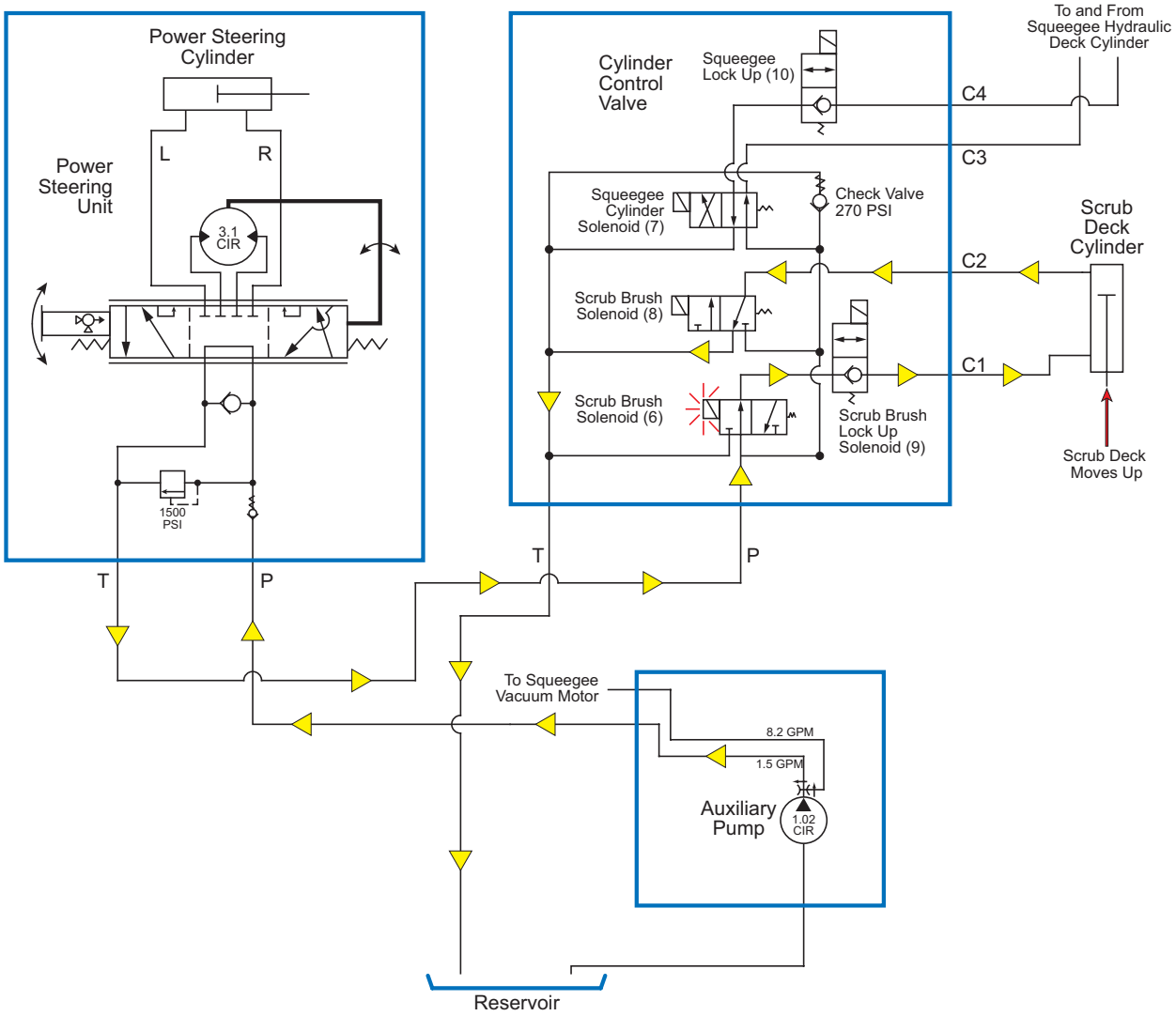

When the Scrub Brush Lift Switch is set to the up position, the **Scrub Brush Solenoid (6)** will be energized. This allows the oil to flow from the discharge side of the **Power Steering Unit** through the **Scrub Brush Solenoid (6)** valve, past the check valve in the de-energized **Scrub Brush Lock Up Solenoid (9)** valve and to the lower port on the **Scrub Deck Cylinder**. This lifts the scrub deck to its retracted position. The **Check Valve** maintains the circuit pressure at 270 psi.

The oil from the upper port on the **Scrub Deck Cylinder** has a open path through the de-energized **Scrub Brush Solenoid (8)** valve to the return line to the **Reservoir**.

Scrub Deck Up with Engine Shut Off

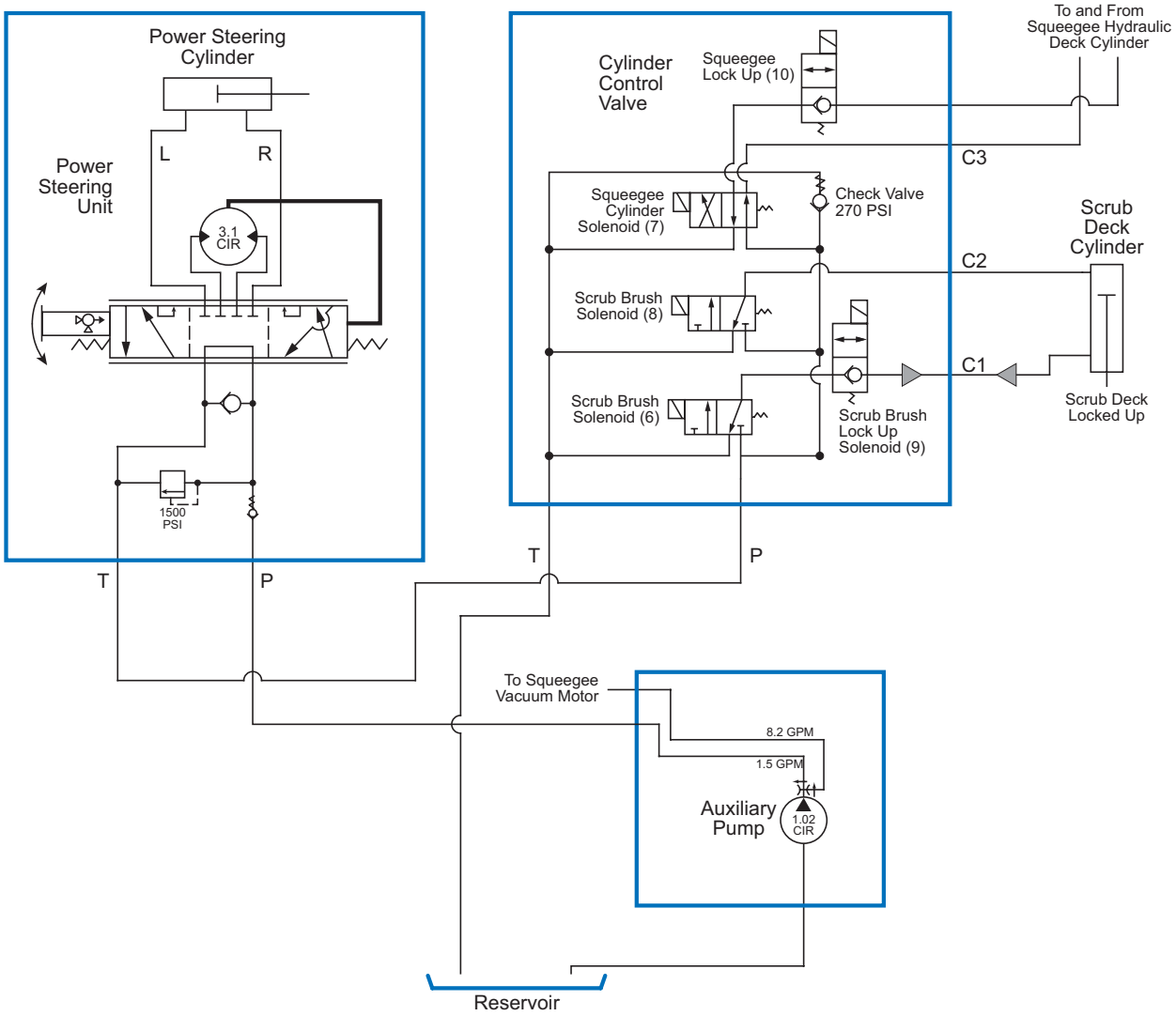

When the scrub deck is raised and the engine is shut off, the check valve in the de-energized **Scrub Brush Lock Up Solenoid (9)** valve holds the oil pressure from the bottom port on the **Scrub Deck Cylinder**. This supports the weight of the **Scrub Deck** when in its retracted position to prevent it from “floating down”.

Component Locations

The following components are included in this section:

- Scrub Deck and Hydraulic Scrub Motors
- Scrub Deck Hydraulic Cylinder
- Main Control Valve
- Cylinder Control Valve

The **Scrub Deck** is suspended underneath the machine and pivots up and down on a mechanical mount. The three **Hydraulic Scrub Motors** are mounted vertically on the **Scrub Deck**.

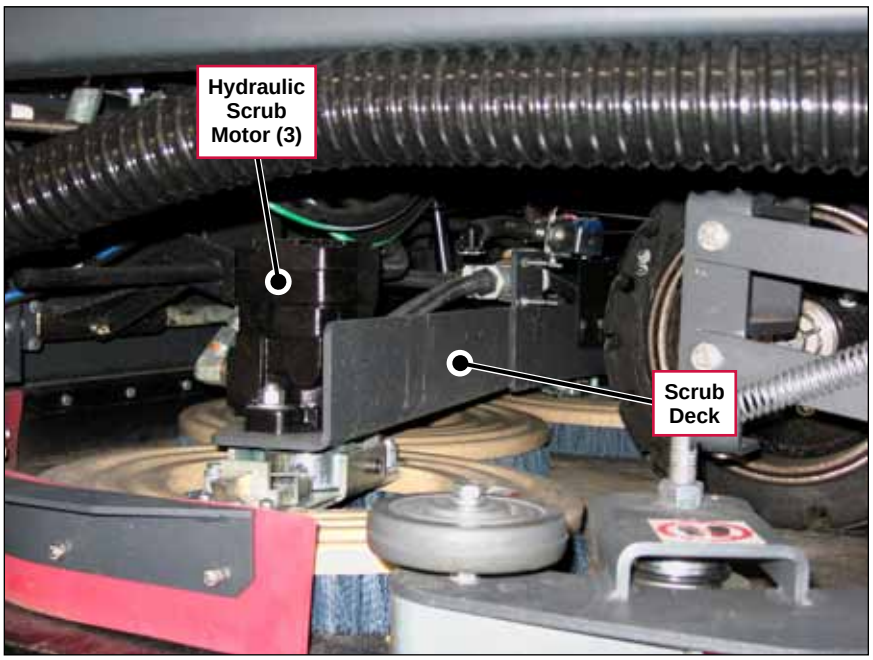

The **Scrub Deck Hydraulic Cylinder** is attached to the **Scrub Deck** and machine frame and lowers and raises the **Scrub Deck**.

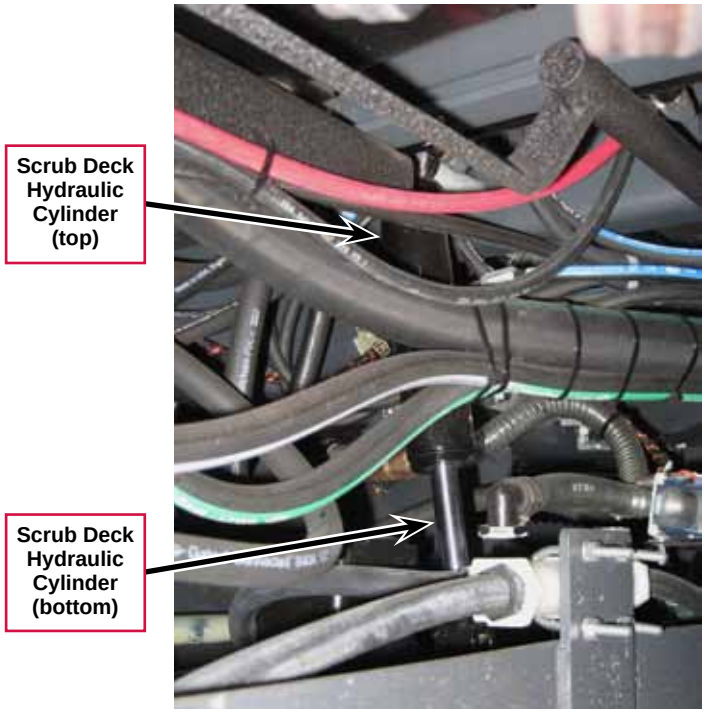

The **Normal Rotation Brush (4)** and **Reverse Rotation Brush (3)** solenoid valves are part of the **Main Control Valve**. The **Main Control Valve** is mounted on the underside of the machine, in front of and to the left of the scrub deck.

When the **Normal Rotation Brush (4)** solenoid is energized, it closes to direct the oil flow in and out of **Ports 3** and **4** on the **Main Control Valve**. The direction of oil flow is determined by the position of the **Reverse Rotation Brush (3)** solenoid valve which controls the direction of brush rotation.

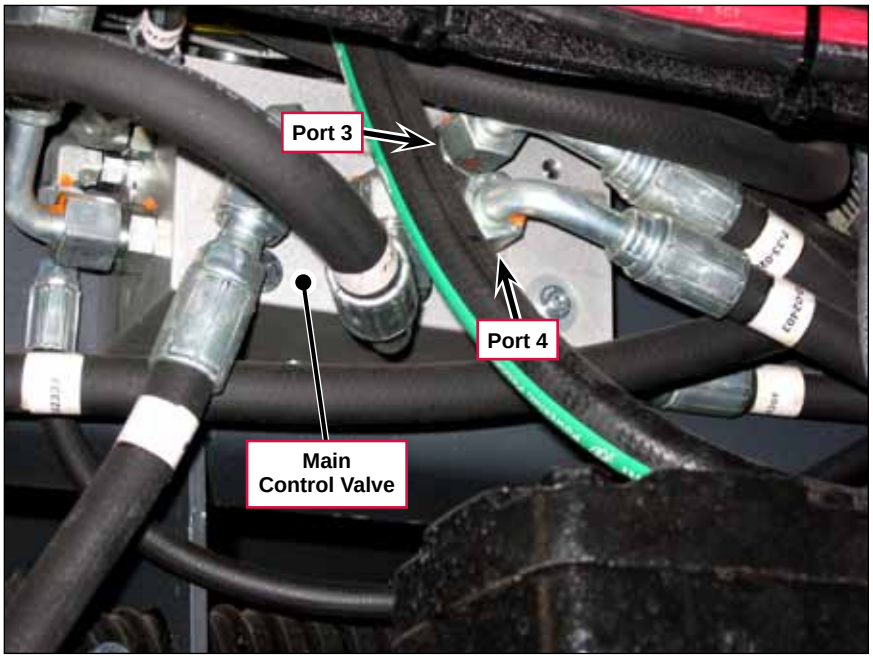

Main Control Valve
(bottom view - shown mounted in assembled machine)

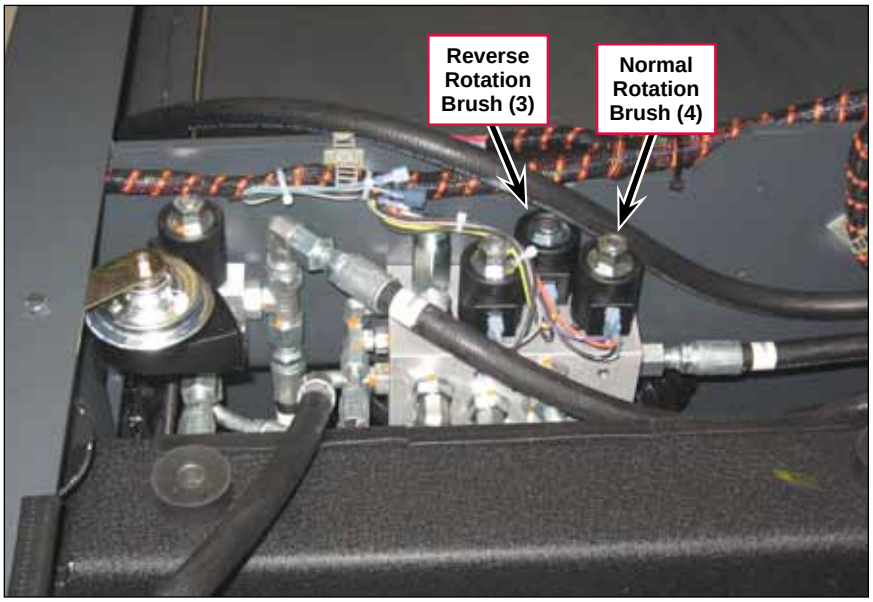

Main Control Valve
(top view - shown while machine is being assembled)

The **Scrub Brush Solenoid (6)**, **Scrub Brush Solenoid (8)** and **Scrub Brush Lock Up Solenoid (9)** are part of the **Cylinder Control Valve** located below the access panel on the floor of the Operator compartment.

The hydraulic hose from **Port C1** on the **Cylinder Control Valve** is connected to the lower port on the scrub deck cylinder.

The hydraulic hose from **Port C2** on the **Cylinder Control Valve** is connected to the upper port on the scrub deck cylinder.

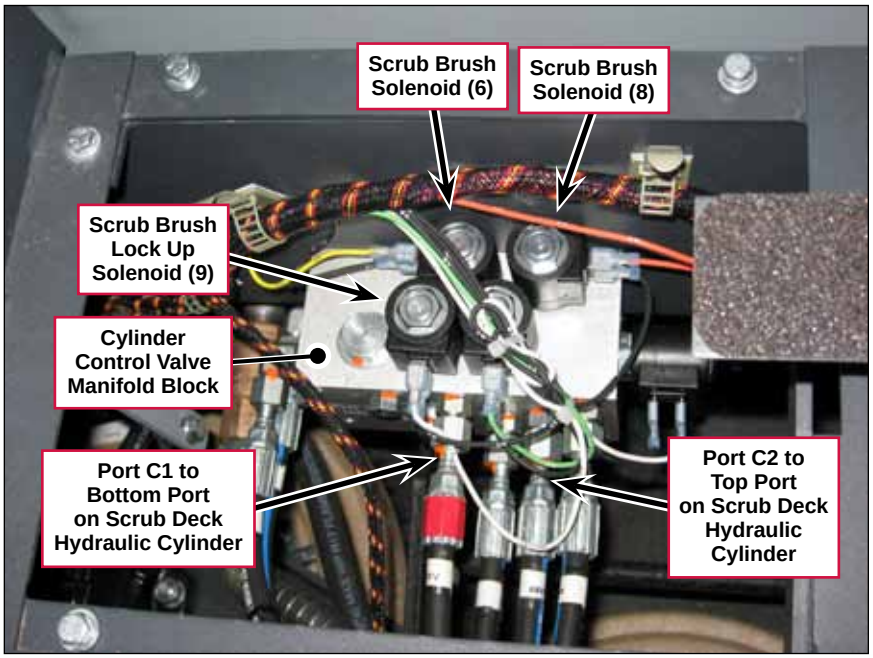

Troubleshooting

Problem	Cause	Correction
Scrub deck motors not running.	No voltage to the Normal Rotation Brush (4) solenoid in the Main Control Valve.	1. Check circuit breaker CB7 and reset if necessary. 2. Check that the Drive Pedal Forward Relay is sending 12 VDC to the Forward Relay coil when the drive pedal is moved to the forward position. 3. Check the continuity through the Forward Relay and Scrub Brush Switch to the Normal Rotation Brush (4) solenoid. Repair the wiring, or replace the relay and/or switch as necessary.
	Normal Rotation Brush (4) solenoid in the Main Control Valve not operating (stuck open).	1. Check the coil resistance of the Normal Rotation Brush (4) solenoid. If not 7.2 ohms ±10%, replace the coil. 2. If the coil resistance is within spec, check for binding or a mechanical problem. Repair or replace the valve as necessary.
Unable to change scrub brush rotation direction.	No voltage to the Reverse Rotation Brush (3) solenoid in the Main Control Valve.	1. Check circuit breaker CB7 and reset if necessary. 2. Check the continuity through the Brush Rotation Switch to the Reverse Rotation Brush (3) solenoid. Repair the wiring or replace the switch as necessary.
	Reverse Rotation Brush (3) solenoid in the Main Control Valve not operating.	1. Check the coil resistance of the Reverse Rotation Brush (3) solenoid. If not 7.2 ohms ±10%, replace the coil. 2. If the coil resistance is within spec, check for binding or a mechanical problem. Repair or replace the valve as necessary.

Problem	Cause	Correction
Scrub deck will not extend downward to the normal scrub position.	No voltage to the Scrub Brush Lock Up Solenoid (9) in the Cylinder Control Valve.	1. Check circuit breaker CB7 and reset if necessary. 2. Check the wiring from CB7 to the Scrub Brush Lock Up Solenoid (9) valve and repair as necessary.
	Scrub Deck Lock Up Solenoid (9) in the Cylinder Control Valve not opening when energized (stuck closed).	1. Check the coil resistance of the Scrub Deck Lock Up Solenoid (9). If not 9.8 ohms ±10%, replace the coil. 2. If the coil resistance is within spec, check for binding or a mechanical problem. Repair or replace the valve as necessary.
	Scrub Brush Solenoid (6) and/or Scrub Brush Solenoid (8) in the Cylinder Control Valve not moving to the “deadhead” position when de-energized (stuck open).	1. Check the coil resistance of the Scrub Brush Solenoid (6) and Scrub Brush Solenoid (8). If not 9.8 ohms ±10%, replace the coil. 2. If the coil resistances are within spec, check for binding or a mechanical problem. Repair or replace the valve(s) as necessary.
Scrub deck not being lowered to the heavy scrub position.	No voltage to the Scrub Brush Lock Up Solenoid (9) in the Cylinder Control Valve.	1. Check circuit breaker CB7 and reset if necessary. 2. Check the wiring from CB7 to the Scrub Brush Lock Up Solenoid (9) and repair as necessary.
	Scrub Deck Lock Up Solenoid (9) in the Cylinder Control Valve not opening when energized (stuck closed).	1. Check the coil resistance of the Scrub Brush Lock Up Solenoid (9). If the coil resistance is not 9.8 ohms ±10%, replace the coil. 2. If the coil resistance is within spec, check for binding or a mechanical problem. Repair or replace the valve as necessary.
	No voltage to the Scrub Brush Solenoid (8) in the Cylinder Control Valve.	1. Check circuit breaker CB7 and reset if necessary. 2. Check that the Drive Pedal Forward Relay is sending 12 VDC to the Forward Relay coil when the drive pedal is in the forward position. 3. Check the continuity through the Forward Relay, Scrub Brush Switch and Brush Pressure Switch to the Scrub Brush Solenoid (8). Repair the wiring, or replace the relay and/or switch(es) as necessary.
	Scrub Brush Solenoid (8) in the Cylinder Control Valve not opening when energized (stuck closed).	1. Check the coil resistance of the Scrub Brush Solenoid (8). If the coil resistance is not 9.8 ohms ±10%, replace the coil. 2. If the coil resistance is within spec, check for binding or a mechanical problem. Repair or replace the valve as necessary.
	Scrub Brush Solenoid (6) not moving to its “deadhead” position when de-energized (stuck open).	1. Check the coil resistance of the Scrub Brush Solenoid (6). If the coil resistance is not 9.8 ohms ±10%, replace the coil. 2. If the coil resistance is within spec, check for binding or a mechanical problem. Repair or replace the valve as necessary.

Problem	Cause	Correction
Scrub deck not being raised to the retracted position.	Scrub Brush Solenoid (6) not opening when energized (stuck closed).	1. Check the coil resistance of the Scrub Brush Solenoid (6). If the coil resistance is not 9.8 ohms ±10%, replace the coil. 2. If the coil resistance is within spec, check for binding or a mechanical problem. Repair or replace the valve as necessary.
	Scrub Brush Solenoid (8) not opening path from top of Scrub Deck Cylinder to reservoir return when de-energized (stuck open).	1. Check the coil resistance of the Scrub Brush Solenoid (8). If the coil resistance is not 9.8 ohms ±10%, replace the coil. 2. If the coil resistance is within spec, check for binding or a mechanical problem. Repair or replace the valve as necessary.

Specifications

Component Specifications

Component	Specifications
Normal Rotation Brush (4) Solenoid	Initial Current Draw – 1.67 amps
Reverse Rotation Brush (6) Solenoid	Nominal Coil Resistance – 7.2 ohms
Scrub Brush Solenoid (6) **Scrub Brush Solenoid (8)**	Initial Current Draw – 1.22 amps
Scrub Brush Lock Up Solenoid (9)	Nominal Coil Resistance – 9.8 ohms
Scrub Brush Motors	Displacement – 10 CIR

Special Tools

Hydraulic test gauge w/connector, 3000 psi range, p/n 56504516	

Solution System

Functional Description

The solution system directs and regulates the solution flow from the solution tank to the scrub brushes.

Overview – Standard Solution System

On machines not equipped with the ESP/Recycle option, the solution travels from the **Solution Tank** through the **Inlet Strainer**, then to the regulating **Ball Valve**. The **Ball Valve** is manually controlled by the solution control lever and regulates the solution flow to the three **Scrub Brushes**.

The **Squeegee** picks up the wastewater from the floor and directs it to the **Recovery Tank**.

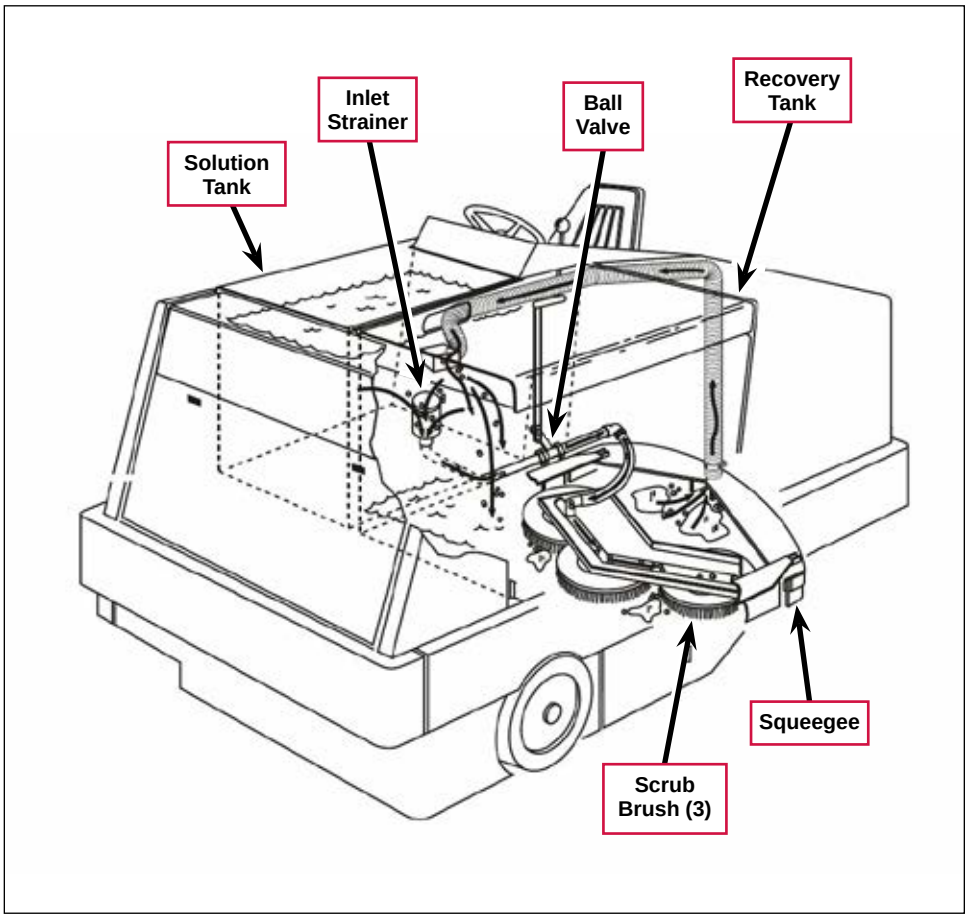

Solution Tank

The standard **Solution Tank** holds 100 gallons [379 liters] of solution which is gravity-fed through the ball valve to the scrub brushes.

The **Inlet Strainer** filters the solution before it travels from the **Solution Tank** to the ball valve.

The **Drain Plug Assembly** plugs the drain hole to the **Drain Hose**. The **Drain Plug Assembly** uses an expanding plug that expands when the **Tee-handle** is tightened (rotated clockwise) to seal the drain hole.

The **Drain Hose** is supported by a hose holder which swings out away from the machine to free the **Drain Hose** to drain the **Solution Tank**.

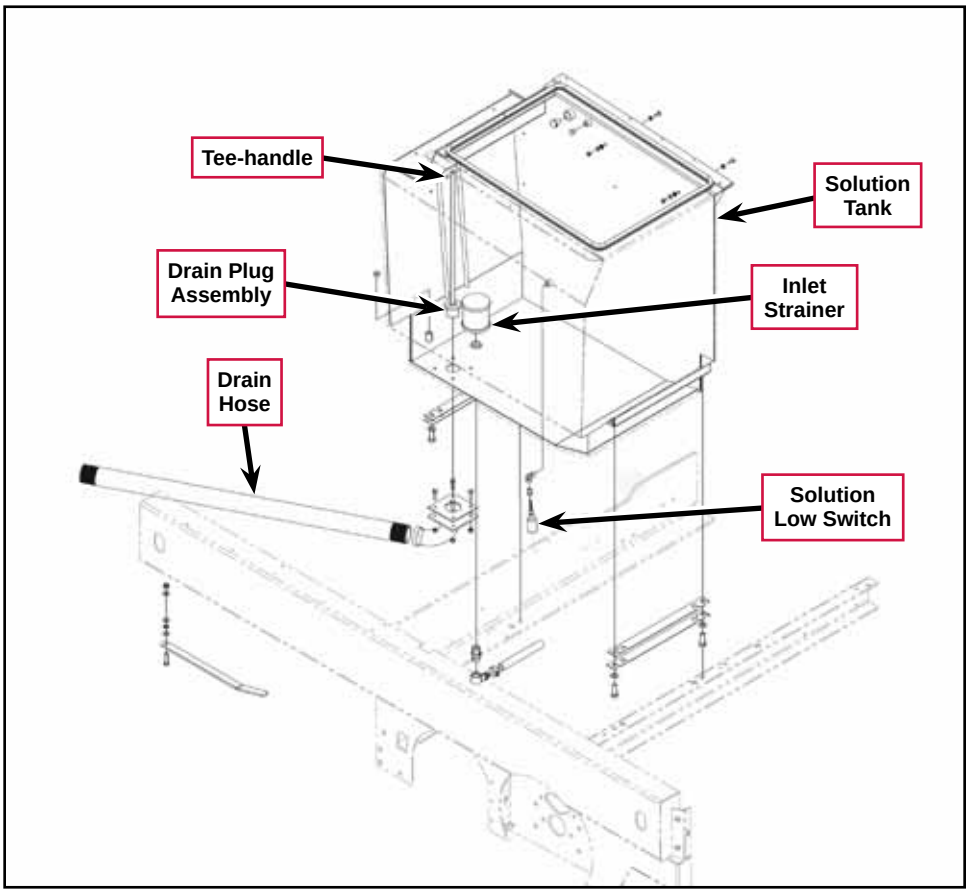

When the solution level in the **Solution Tank** is low, the **Solution Low Switch** will actuate the **Low Solution Warning Light** on the instrument panel.

The solution tank also provides solution to the Power Spray Wand Option if the machine is so equipped.

Low Solution Warning Light

Solution Flow Control

The **Solution Control Lever**, located to the left of the Operator, pivots to move the **Solution Control Link** up and down. The **Solution Control Link** rotates the lever arm on the **Ball Valve** to regulate the solution flow.

Note that this a mechanical system and is not affected by the status of the scrub system, or whether or not the machine is moving. Whenever the **Solution Control Lever** is moved from the off position, solution will flow to the scrub deck.

Also note that the solution flow control is the same for all machines regardless of whether or not they're equipped with the ESP/Recycle option.

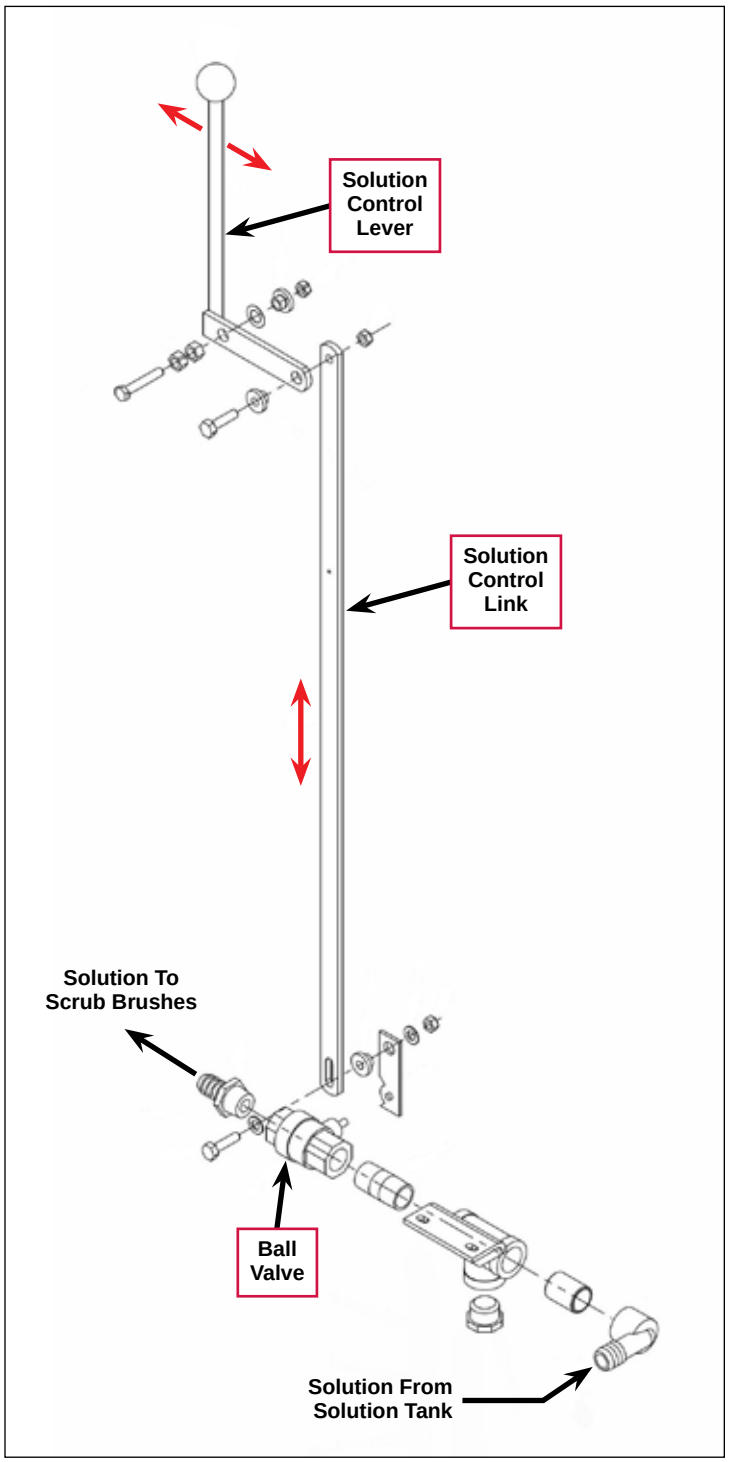

Overview – ESP/Recycle Option

On machines equipped with the ESP/Recycle option, wastewater is pumped from the **Recovery Tank** to the **Solution Tank** to be recycled to the **Scrub Brushes**. The **Detergent Pump** adds detergent to the solution downstream of the **Ball Valve**.

The vacuum motor pulls the wastewater (dark blue arrows) from the **Squeegee** to the **Recovery Tank**. The wastewater passes through the **Solution Inlet Filter**, then to the **ESP Solution Pump** that pumps the filtered wastewater (light blue arrows) back into the **Solution Tank**.

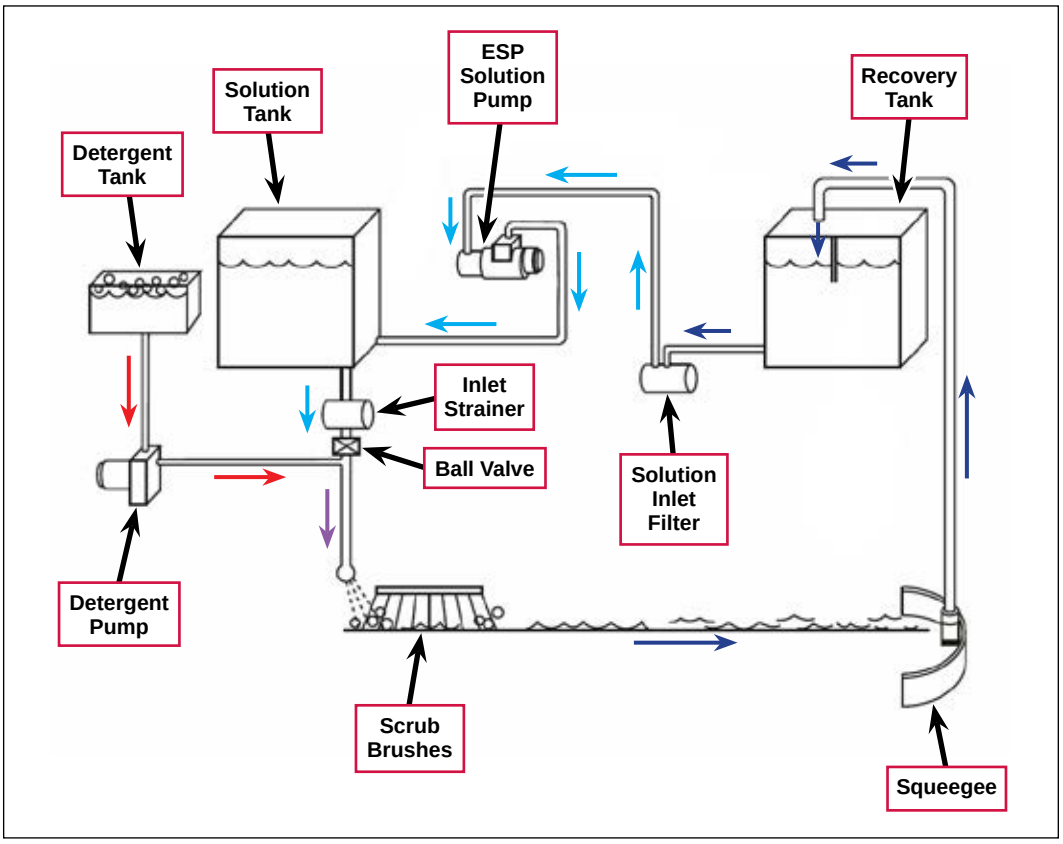

The Recovery High Switch (red float switch) in the **Recovery Tank** and Recycling System On/Off switch on the instrument panel control the **ESP Solution Pump**.

The **Detergent Pump** pumps detergent (red arrows) from the **Detergent Tank** into the solution stream. The solution/detergent mixture (violet arrow) is then delivered to the three **Scrub Brushes**.

Refer to the ***Recovery System*** section for more information on the recovery tank configurations and operation, and the ESP/Recycle option.

Detergent and Solution Tanks

The **Detergent Tank** is mounted in the **Solution Tank** and supplies detergent to the **Detergent Pump**.

The **Detergent Low Switch** in the **Detergent Tank** will light the **LOW DETERGENT** warning light on the instrument panel when the detergent level in the **Detergent Tank** is low.

The **Solution High Switch** in the **Solution Tank** will light the **HIGH SOLUTION** warning light on the instrument panel when the water level in the **Solution Tank** is too high.

Detergent Pump

The **Detergent Pump** pumps detergent from the **Detergent Tank** into the solution line downstream of the ball valve. The Detergent Flow knob on the instrument panel controls the detergent flow rate.

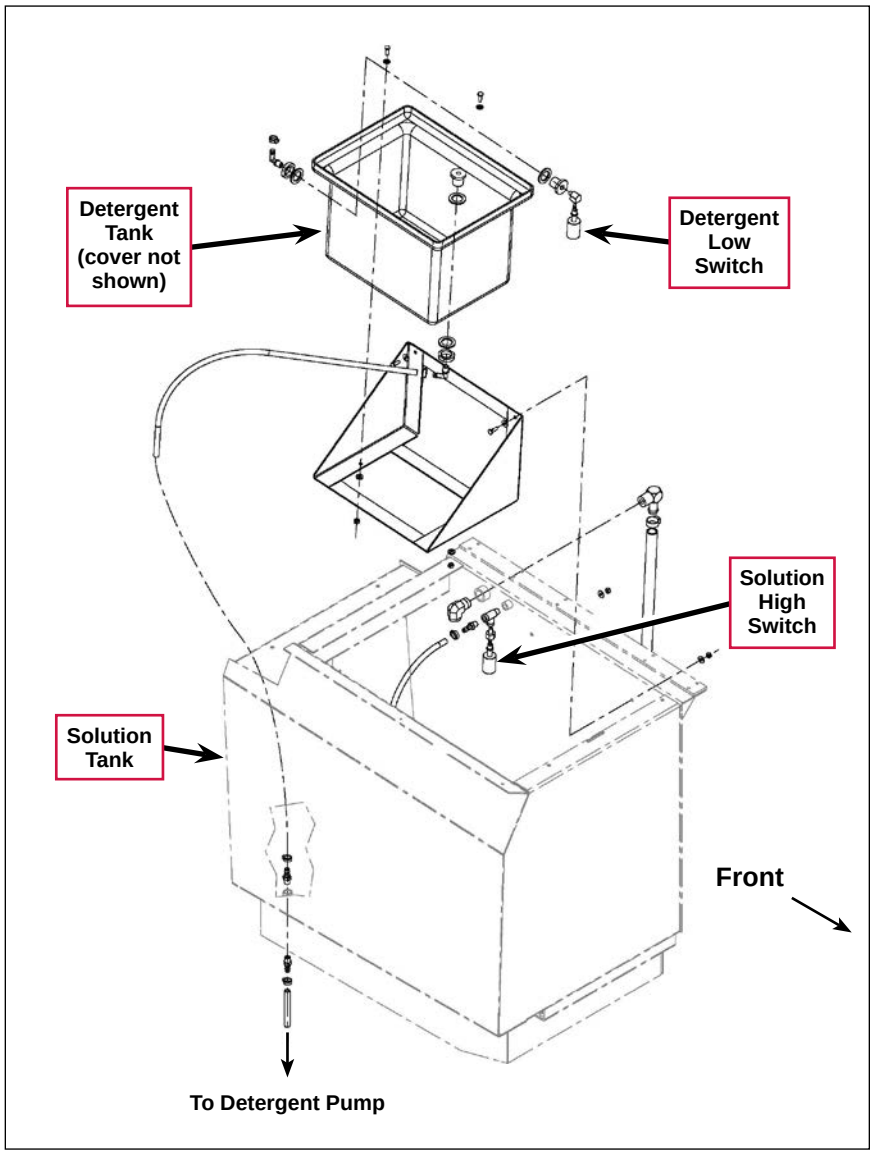

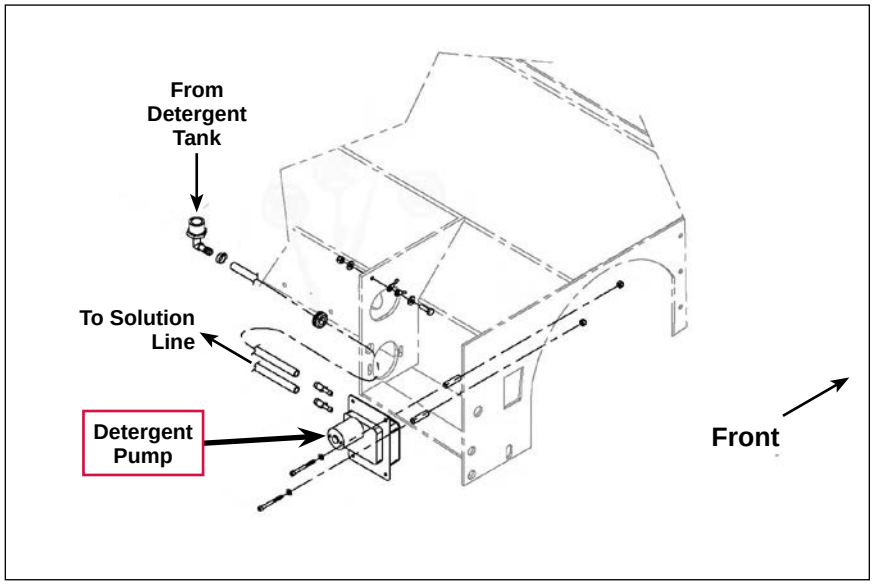

Solution Off in Neutral Option

The Solution Off in Neutral Option includes a **Solenoid Valve** between the **Solution Water Feed Hose** from the solution tank and the **90° Nipple** on the **Tee Fitting** that supplies solution to the scrub brushes.

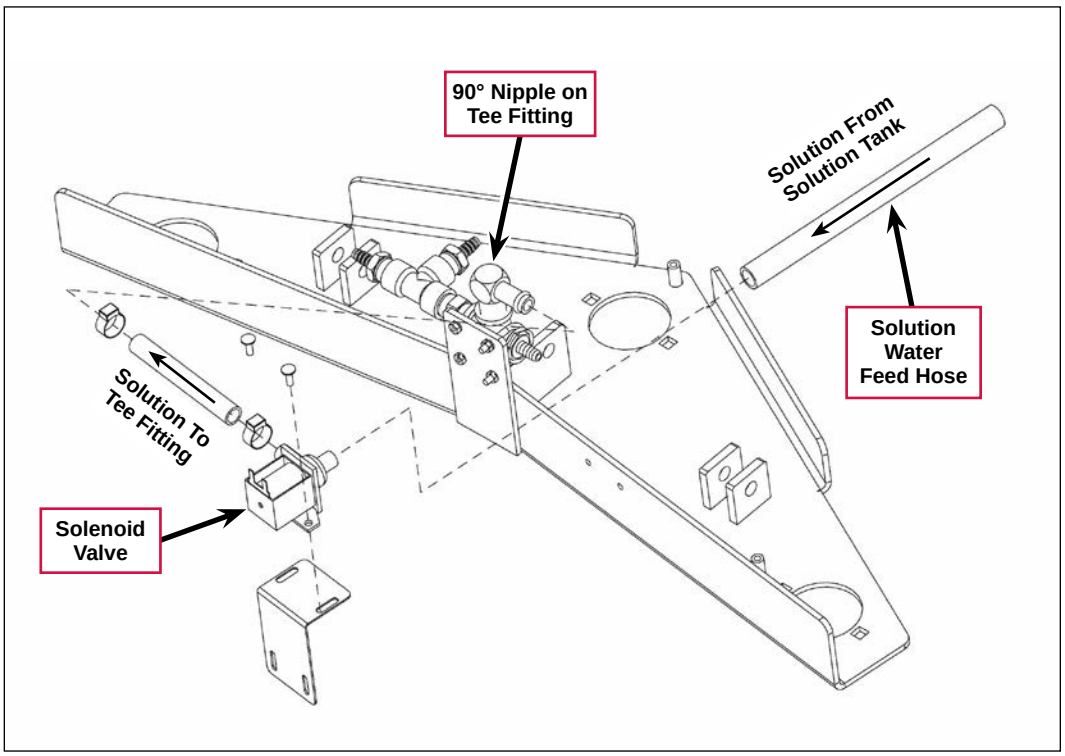

The **Solenoid Valve** is controlled by the proximity sensors at the drive pedal as follows:

- When the drive pedal is in the forward or reverse position, the **Solenoid Valve** is energized and opens to allow solution flow to the scrub brushes,
- When the drive pedal is in the neutral position, the **Solenoid Valve** is de-energized and closes to shut off the solution flow to the scrub brushes.

Power Spray Wand (optional)

The optional Power Spray Wand uses a separate 12-volt **Water Pump** to pump solution through the solution hose on the **Hose Assembly** to the **Solution Valve** mounted on the **Wand Assembly**. The **Solution Valve** controls the solution flow through the **Solution Feed Hose** to the **Spray Nozzle** mounted on the end of the **Wand Assembly**.

The **Hose Assembly** connects to the squeegee vacuum hose on the machine to provide vacuum pick-up to the **Tool Assembly**.

The **On-Off Toggle Switch** that controls the **Water Pump** is mounted on the instrument panel.

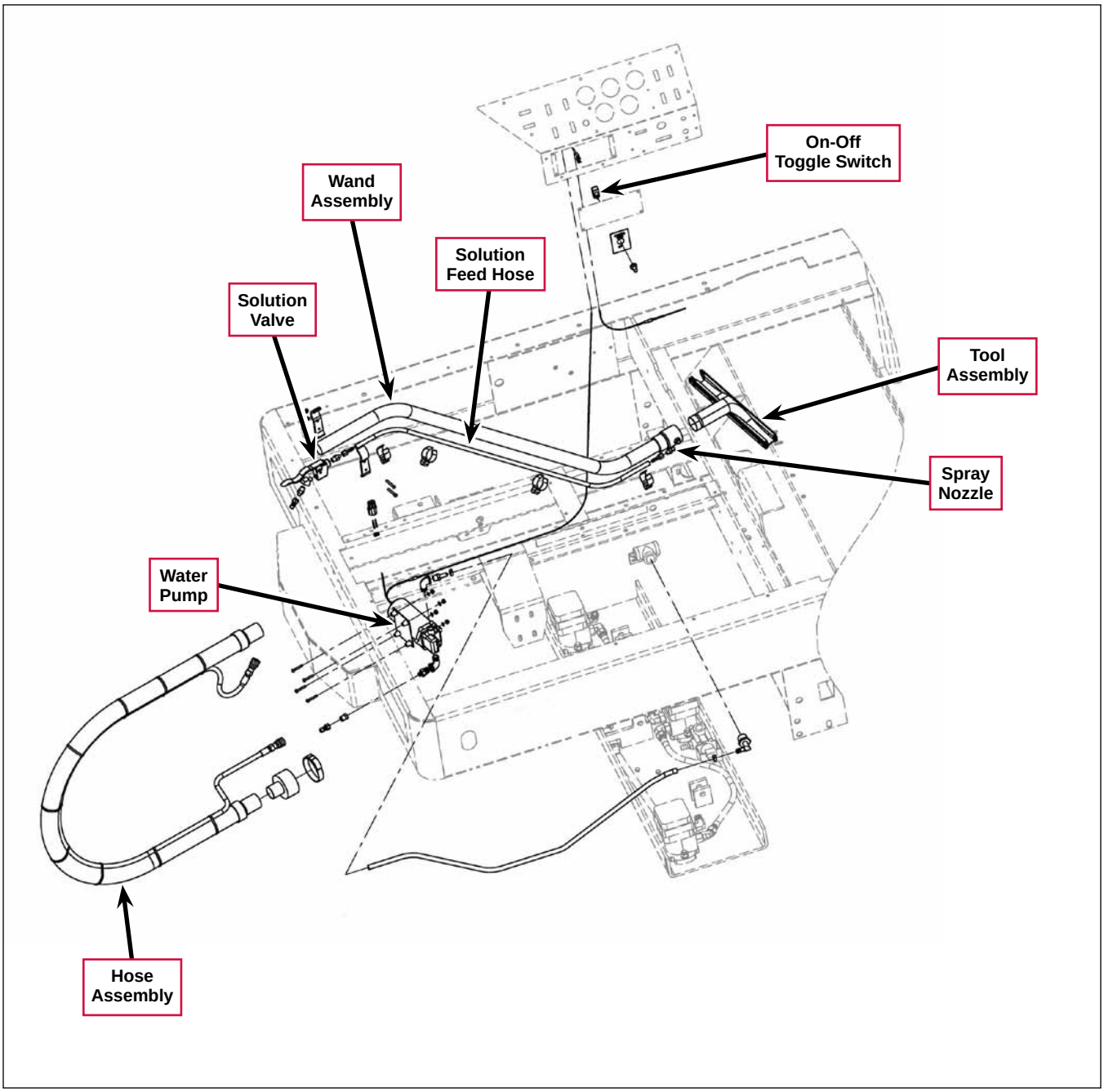

Standard Solution System Wiring Diagram

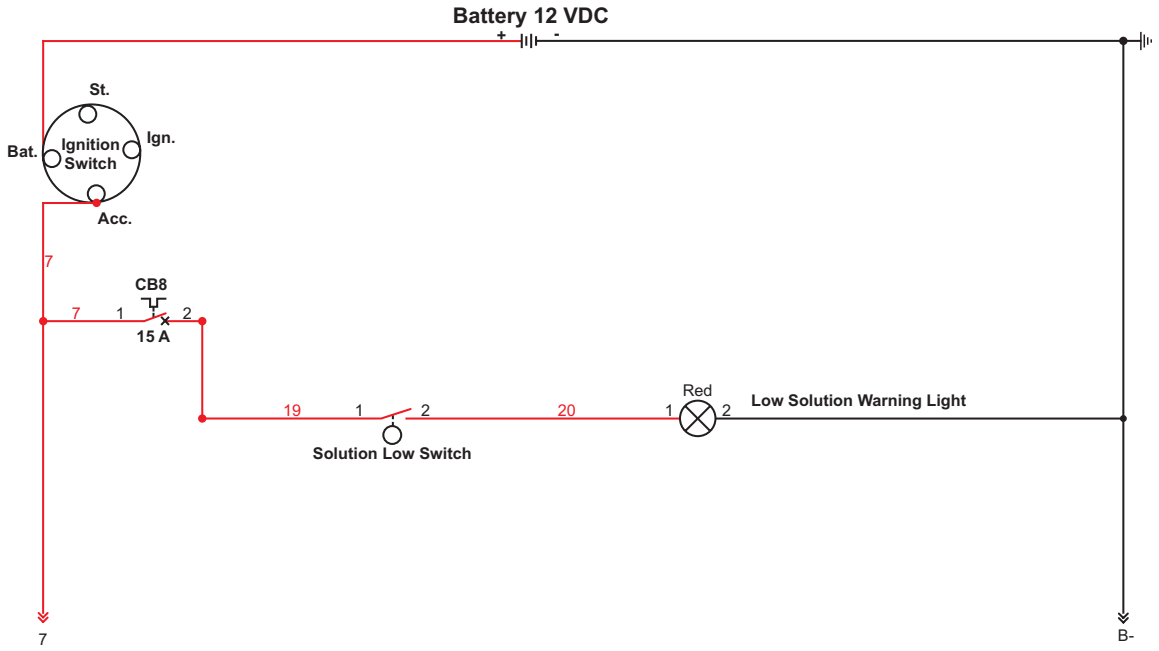

Circuit Description

The only electrical circuit on the standard Solution System is the wiring and **Solution Low Switch** (liquid level switch) that switches on the **Low Solution Warning Light** on the instrument panel when the solution level in the solution tank is low.

Low Solution Warning Light

The **Ignition Switch** must be on for the **Solution Low Switch** and **Low Solution Warning Light** to function.

ESP/Recycle Option Wiring Diagram

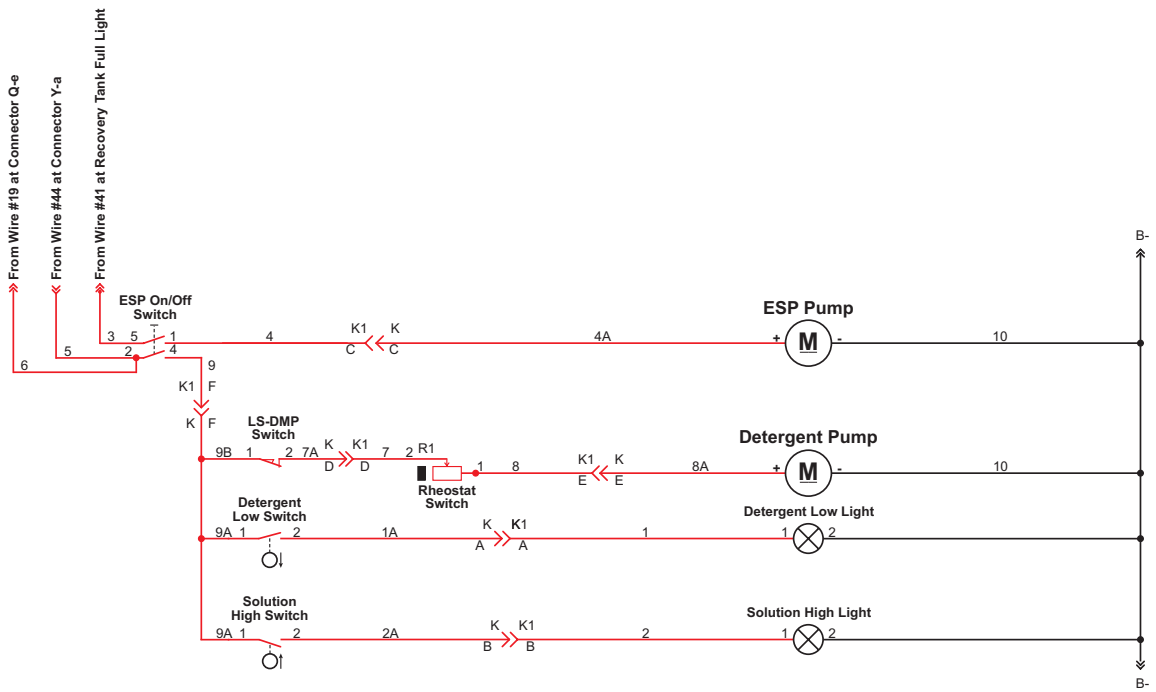

Circuit Description

- (Also refer to the ***Recovery System*** section.) When the water level in the recovery tank is high enough to actuate (close) the Recovery High Switch and switch on the High Recovery Warning Light, a connection off of wire **41** provides positive voltage to terminal **5** on the **ESP** (Recycling System) **On/Off Switch**. When the **ESP On/Off Switch** is closed, the **ESP Pump** will switch on to pump filtered recovered water from the recovery tank into the solution tank.

- When the **ESP** (Recycling System) **On/Off Switch** is closed, positive voltage is provided to the **LS-DMP Switch**. When the Operator moves the solution control lever forward off of the "no flow" position, a roll pin on the solution control lever actuates (closes) the **LS-DMP Switch** which provides positive voltage to the **Rheostat Switch**. The **Rheostat Switch** is a two-terminal potentiometer that controls the voltage to the **Detergent Pump** to regulate the detergent pump speed/detergent flow to the solution line.

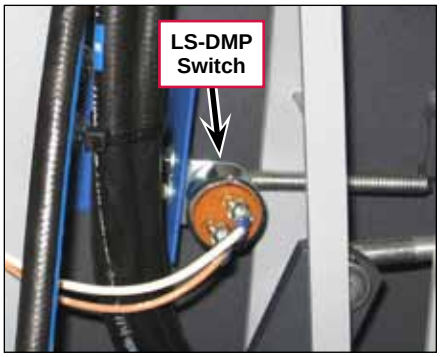

- When the detergent level in the detergent tank drops low enough to actuate (close) the **Detergent Low Switch** (liquid level switch), the **Detergent Low Switch** provides positive voltage to light the **Detergent Low Light**.

- When solution level in the solution tank rises high enough to actuate (close) the **Solution High Switch** (liquid level switch) in the solution tank, the **Solution High Switch** provides positive voltage to light the **Solution High Light**.

Component Locations

The following components are included in this section:

- Solution Tank
- Solution Control Lever
- ESP Pump
- Detergent Low Switch
- Detergent Flow Control Knob
- Solution Low Switch
- Ball Valve
- Detergent Pump
- Solution High Switch
- Drain Hose and Hose Holder
- Solution Solenoid Valve
- LS-DMP Switch
- ESP/Recycling System On/Off Switch

Standard Solution System

The **Solution Tank** is fixed and is located on the front right-hand side of the machine.

The **Cover Support Rod** holds the **Cover Weldment** in the open position.

The **Drain Plug Assembly** can be removed to drain the **Solution Tank** through the drain hose.

The **Inlet Strainer** filters the solution before it goes to the ball valve.

The **Solution Low Switch** (liquid level switch) actuates the Low Solution Warning Light on the instrument panel when the solution level in the tank is low.

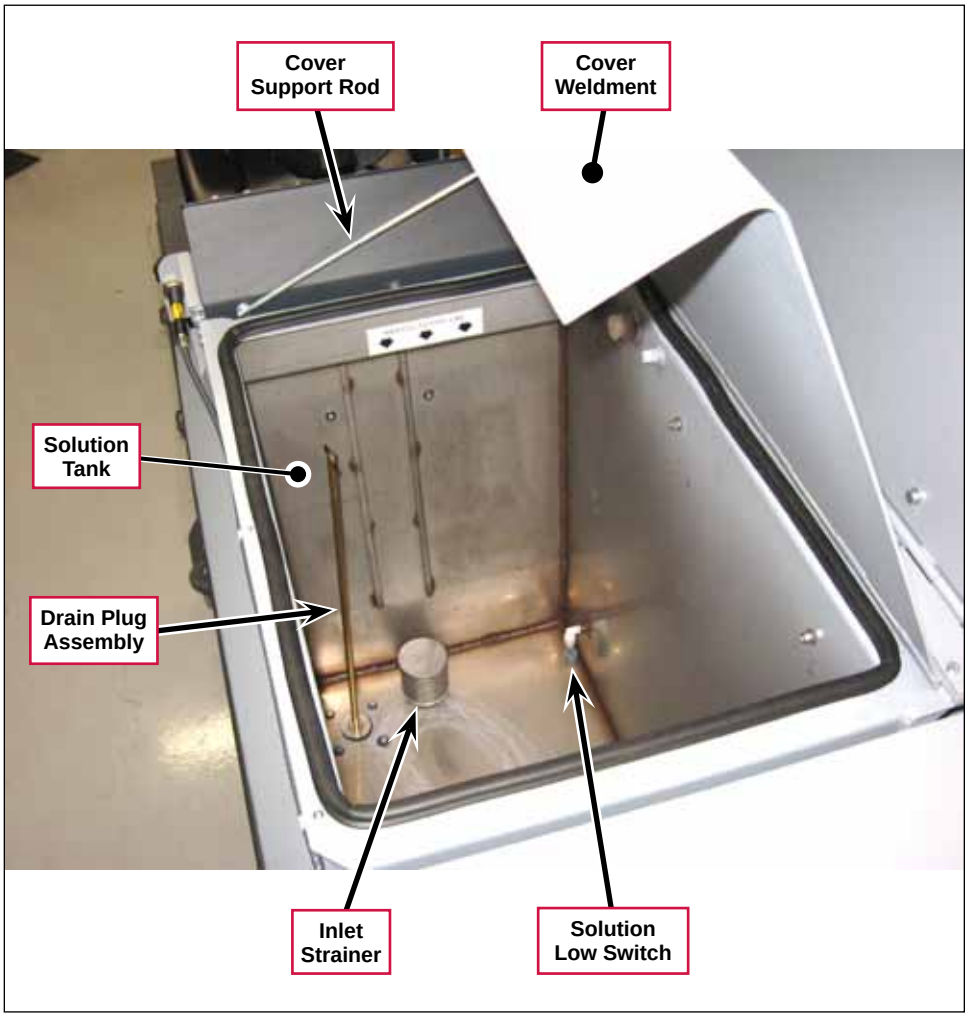

The **Hose Holder** and **Drain Hose** swing out from the side of the machine to free the **Drain Hose** when draining the solution tank.

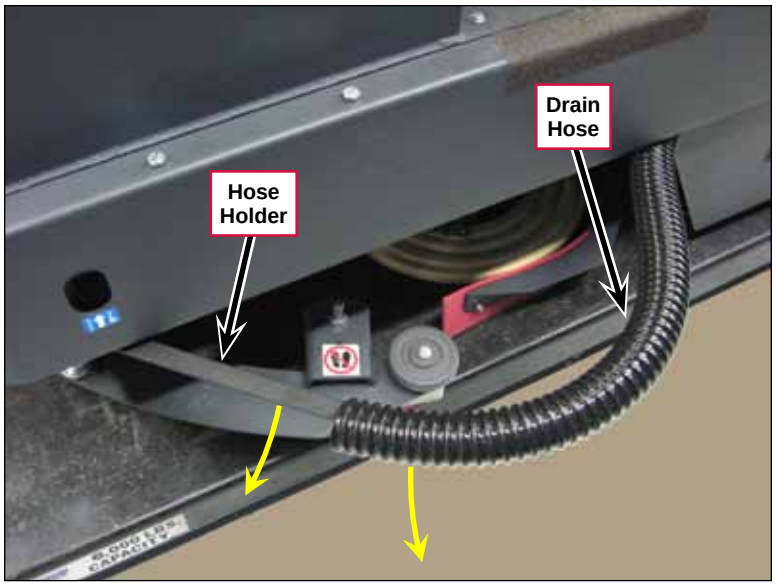

The **Solution Control Lever**, to the left of the Operator, actuates the solution control link connected to the ball valve to regulate the solution flow. The solution flow rate is continuously variable from **No Flow** to a maximum of **3½ GPM**.

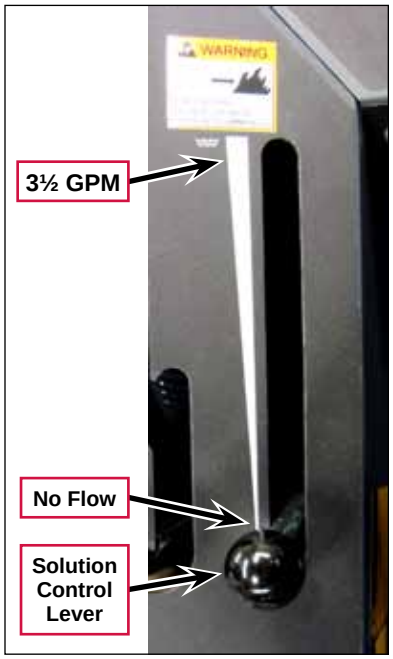

The **Ball Valve** is located above the scrub deck and is actuated by **Solution Control Link** connected to the solution control lever. To access the **Ball Valve**, remove the **Access Panel** on the floor of the Operator compartment.

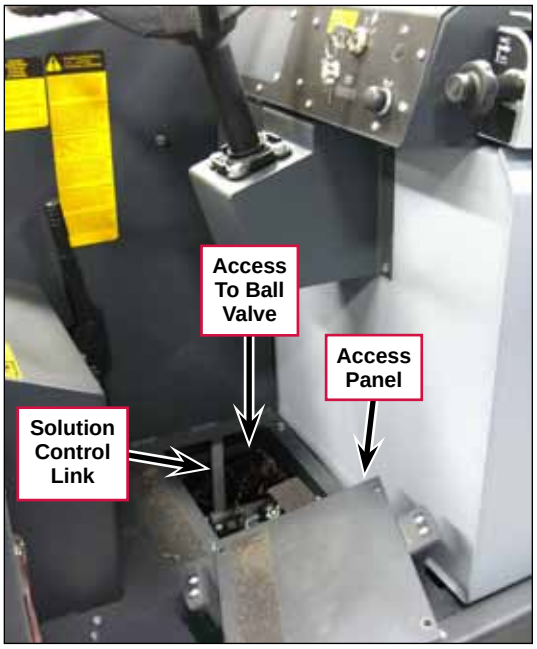

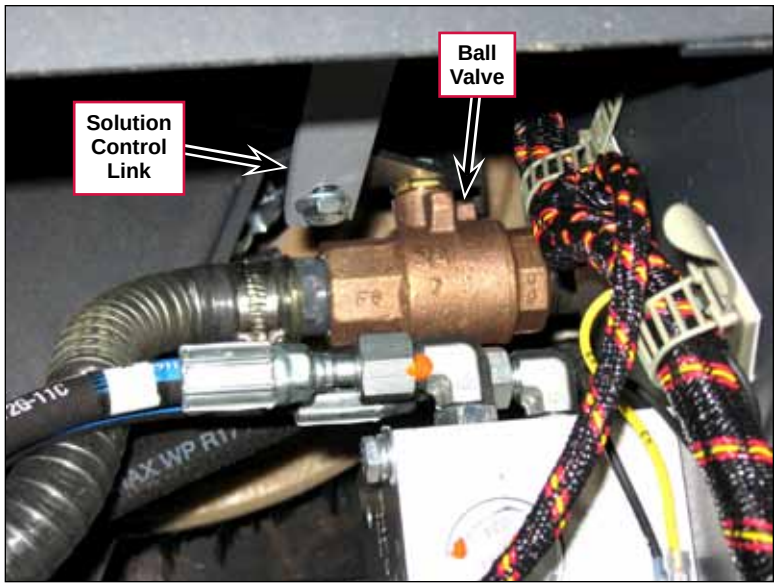

The solution **Solenoid Valve** is included in the Solution Off in Neutral option and is mounted on a bracket above the scrub deck. The **Solenoid Valve** switches off the solution flow to the scrub brushes when the machine is in neutral.

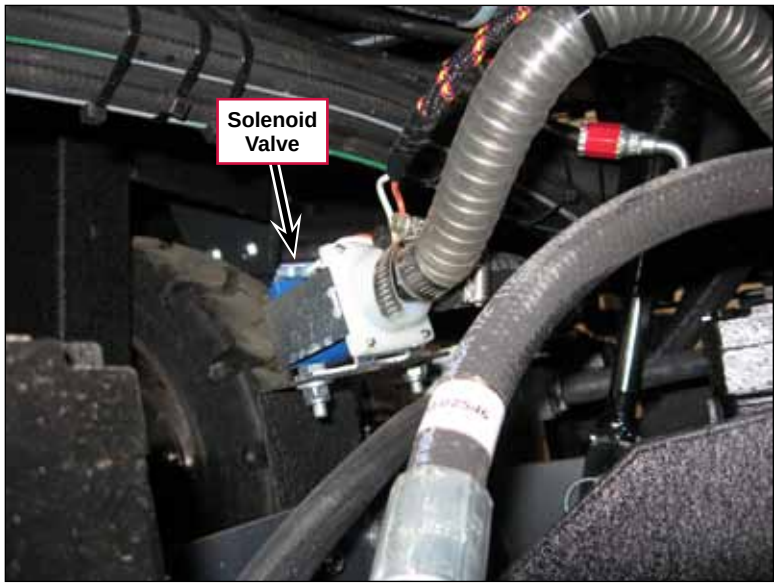

ESP/Recycle Option

The **ESP Pump** is mounted on the machine chassis and pumps filtered solution from the recovery tank to the solution tank.

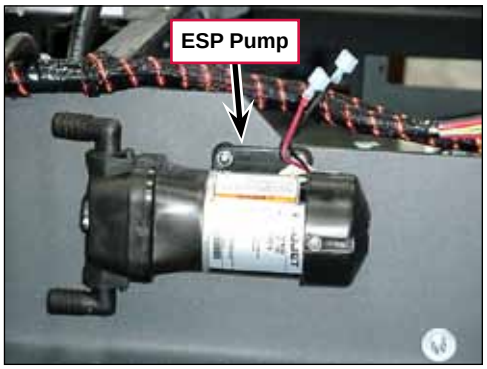

The **Detergent Pump** is mounted on the side of the machine chassis and supplies detergent to the solution line.

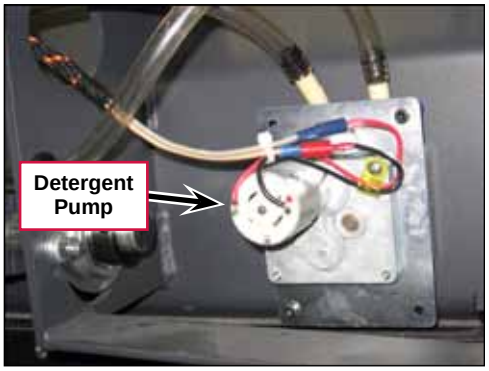

The **LS-DMP Switch** is mounted in line with the solution control lever and closes when the solution control lever is moved forward off of the “no flow” position.

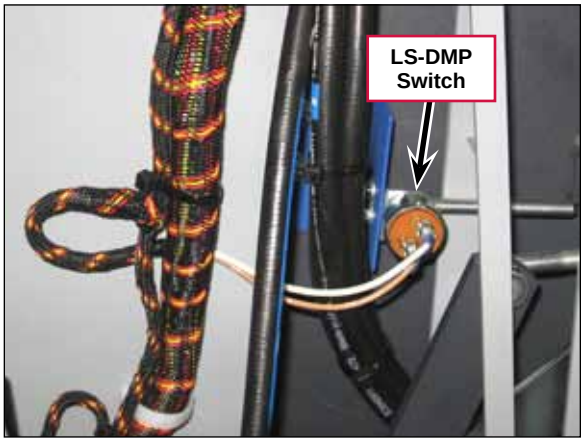

The **Detergent Low Switch** (liquid level switch) is mounted inside the detergent tank and switches on the **Low Detergent** light on the instrument panel when the detergent level is low.

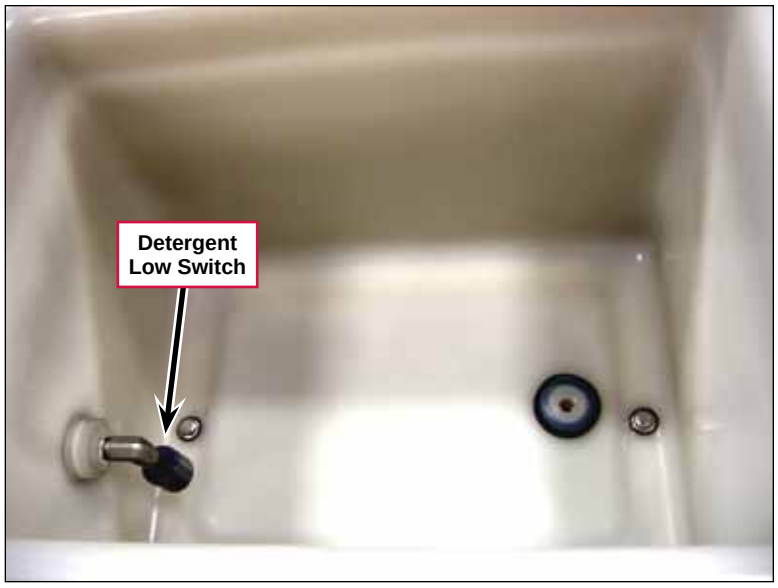

The **Solution High Switch** (liquid level switch) is mounted in the top of the solution tank and switches on the **High Solution** light on the instrument panel when the solution level is high.

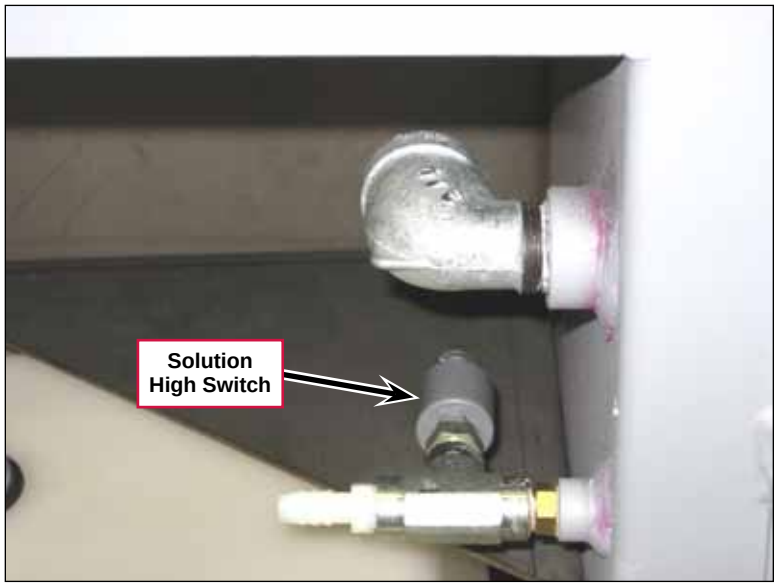

The ESP/**Recycling System On/Off** switch is mounted on the instrument panel and controls the power to the ESP and detergent pumps.

The **Detergent Flow/Off/Max** control knob regulates the voltage to the detergent pump to control the pump speed/detergent output.

Maintenance

Warning! ***Before performing any machine maintenance, make sure the key switch is off, the key is removed from the machine and the parking brake is engaged.***

Solution Tank

To clean the solution tank:

1. Lift the solution tank lid (cover).
2. Position the drain hose over a drain, then remove the drain plug assembly.
3. Flush all deposits from the tank.
4. Flush the liquid level switch and the inlet strainer.
5. Replace and tighten the drain plug assembly.

Note: *The inlet strainer is threaded into the bottom of the tank and is designed to be removed and installed with an oil filter wrench.*

Detergent System (ESP/Recycle Option Only)

To clean and flush the detergent system:

1. Rinse the detergent tank with clean water.
2. Pour clean water into the detergent tank.
3. Set the **DETERGENT FLOW KNOB** to **MAX** and run the detergent and solution systems to purge the detergent pump and lines.

Troubleshooting

Problem	Cause	Correction
No or inadequate solution flow to the scrub brushes.	Low solution level in solution tank.	Check the solution level in the tank and fill as necessary.
	Inlet strainer dirty or plugged.	Clean or replace the inlet strainer.
	Plugged solution delivery hose(s).	Check and clean the solution delivery hoses as necessary.
	Ball valve not operating correctly.	Check the function of the ball valve and the linkage adjustment and repair/replace as necessary.
	Solution valve not operating correctly (Solution Off in Neutral option only).	• Check the solenoid wiring for problems (ORN and WHT wires). • Check the solenoid coil resistance. If not 13 ohms ±10%, replace.

Problem	Cause	Correction
No solution being transferred from the recovery tank to the solution tank (ESP/ Recycle option only).	Recycling System ON/OFF switch is set to OFF.	Set the Recycling System ON/OFF switch to ON.
	Solution inlet filter dirty or plugged.	Clean or replace the filter.
	ESP solution pump not operating.	Check the pump and wiring and repair/replace as necessary.
	No voltage from the Recycling System ON/OFF switch to the ESP solution pump.	• Check for voltage from wire #41 on the High Recovery Warning Light to the Recycling System ON/OFF switch. Repair or replace the wiring as necessary. • Check the Recycling System ON/OFF switch and wiring and repair/replace as necessary.
No detergent being delivered to the solution (ESP/ Recycle option only).	Recycling System ON/OFF switch is set to OFF.	Set the Recycling System ON/OFF switch to ON.
	Detergent Flow knob is set to OFF.	Turn the Detergent Flow knob clockwise from the OFF position.
	Detergent tank is empty.	Check the detergent tank and refill as necessary.
	Detergent supply lines are clogged.	Check the detergent lines and clean/replace as necessary.
	Detergent pump not operating.	• Check the Recycling System ON/OFF switch and wiring and repair as necessary. • Check the Detergent Flow rheostat and wiring to the detergent pump and repair as necessary. • Check the detergent pump. Replace if necessary.
No solution flow through the Power Spray Wand (optional).	Plugged solution feed hose.	Check and clean the solution feed hose as necessary.
	Water pump not operating.	• Check the On-Off toggle switch and wiring and repair as necessary. • Check the water pump. Replace if necessary.
	Solution valve on the wand assembly not operating correctly.	Check the valve and repair/replace as necessary.

Specifications

Component Specifications

Component	Specifications
Solution Tank	100 gal. [379.L] capacity
Solution Solenoid Valve (Solution Off in Neutral option only)	Voltage – 12 VDC, continuous duty
	Power Consumption – 11 Watts
	Coil Resistance – 13 Ohms ±10% @ 25° C.
Water Pump (Power Spray Wand option only)	Voltage – 12 VDC
	Current – 10.6 A @ 100 psi [6.9 bar]
	Pressure – 80-100 psi [5.5-6.9 bar]

Solution System

Solution System Flow Rates	Gravity-fed; continuously variable from zero to 3.5 GPM [13.25 LPM]

ESP Detergent System

Detergent Tank	High-density Polyethylene, 6 gal. [22.7 L] capacity

Squeegee System

Functional Description

Overview

The squeegee system includes the rear squeegee assembly, swing squeegee support, squeegee lift assembly, squeegee deck cylinder and the associated solenoid valves. The rear squeegee assembly is mounted at the bottom rear of the machine and picks up the water from the floor. Two squeegees (inner and outer) pick up the wastewater and direct it into the vacuum hoses which carry the wastewater to the recovery tank. The squeegee deck cylinder lowers the squeegee assembly to the floor for normal scrubbing, and raises the squeegee when the machine is not scrubbing or is moving in reverse.

Rear Squeegee Assembly

The **Squeegee Clamp Strap** on the rear squeegee assembly holds the **Inner** and **Outer Squeegees** and **Squeegee Spacers** on the **Squeegee Weldment**.

The two inner **Squeegee Knobs** fasten the **Squeegee Inlet Duct** and **Squeegee Spacers** to the **Squeegee Weldment**, and hold the **Squeegee Weldment** to the squeegee support weldment.

The two outer **Squeegee Knobs** hold the **Squeegee Weldment** to the squeegee support weldment.

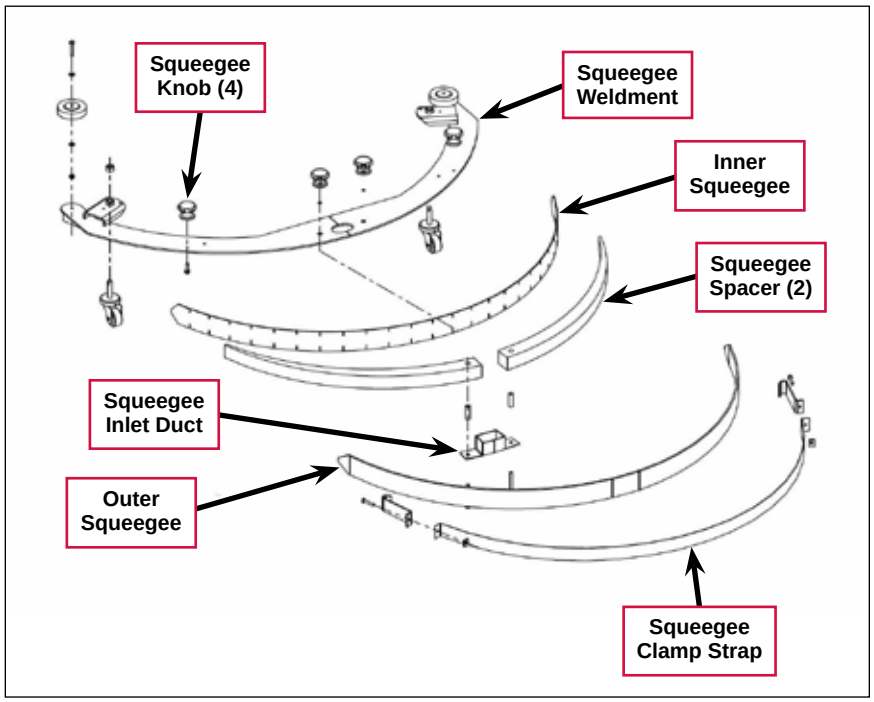

Swing Squeegee Support

The **Squeegee Arms** on the swing squeegee support form parallel linkages that connect the **Rear Pin Weldments** on the **Squeegee Support Weldment** to the **Squeegee Supports**. These linkages allow the squeegee to maintain the correct angle to the floor as the squeegee moves up and down.

The **Shafts** with locking **Collars** connect the **Squeegee Supports** to the **Left** and **Right Pivot Brackets** fastened to the machine frame. The **Squeegee Supports** pivot on the **Shafts** in the **Left** and **Right Pivot Brackets** to allow the squeegee to pivot side-to-side.

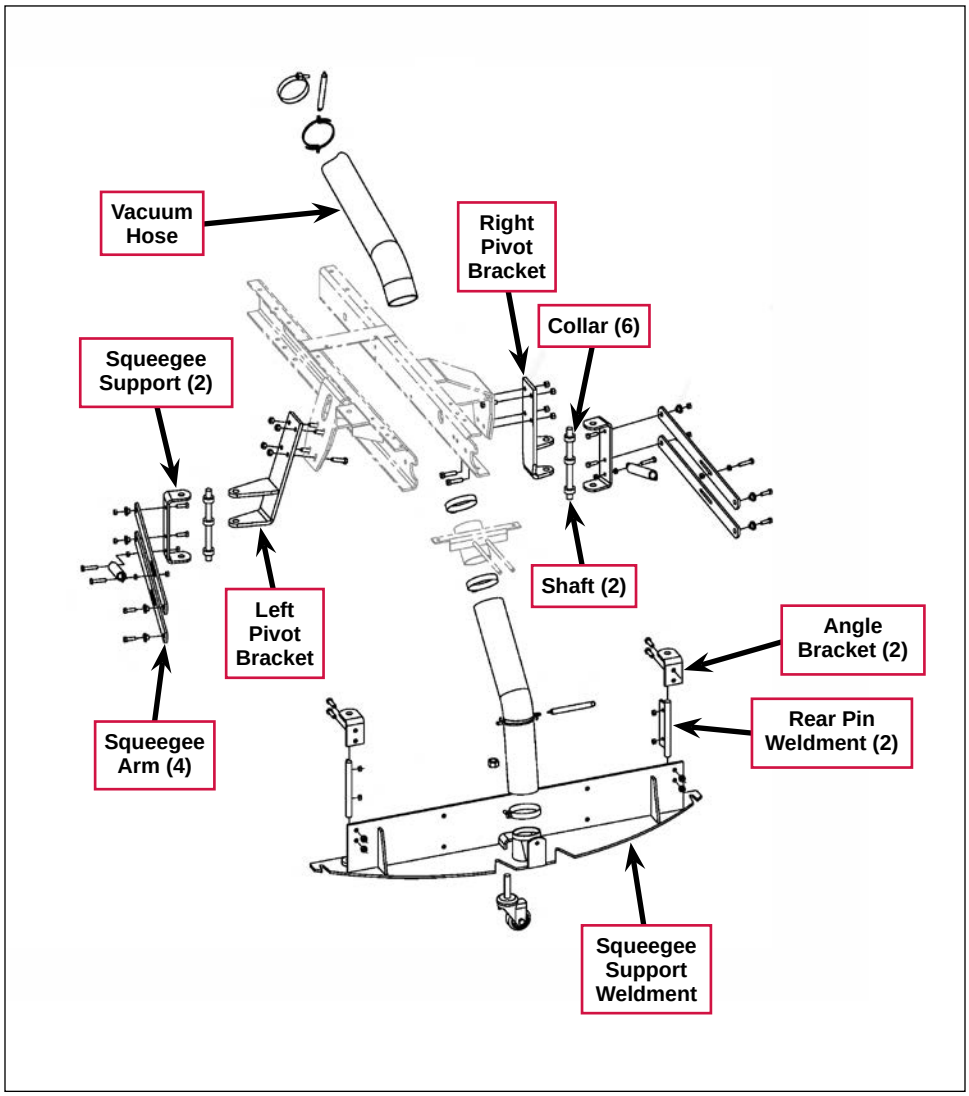

Squeegee Lift Assembly And Squeegee Deck Cylinder

The **Squeegee Deck (Lift) Cylinder** extends and retracts to pivot the **Squeegee Lift Arm** down and up.

The **Squeegee Lift Arm** raises and lowers the **Squeegee Lift Chain** attached to the squeegee support weldment to raise and lower the squeegee.

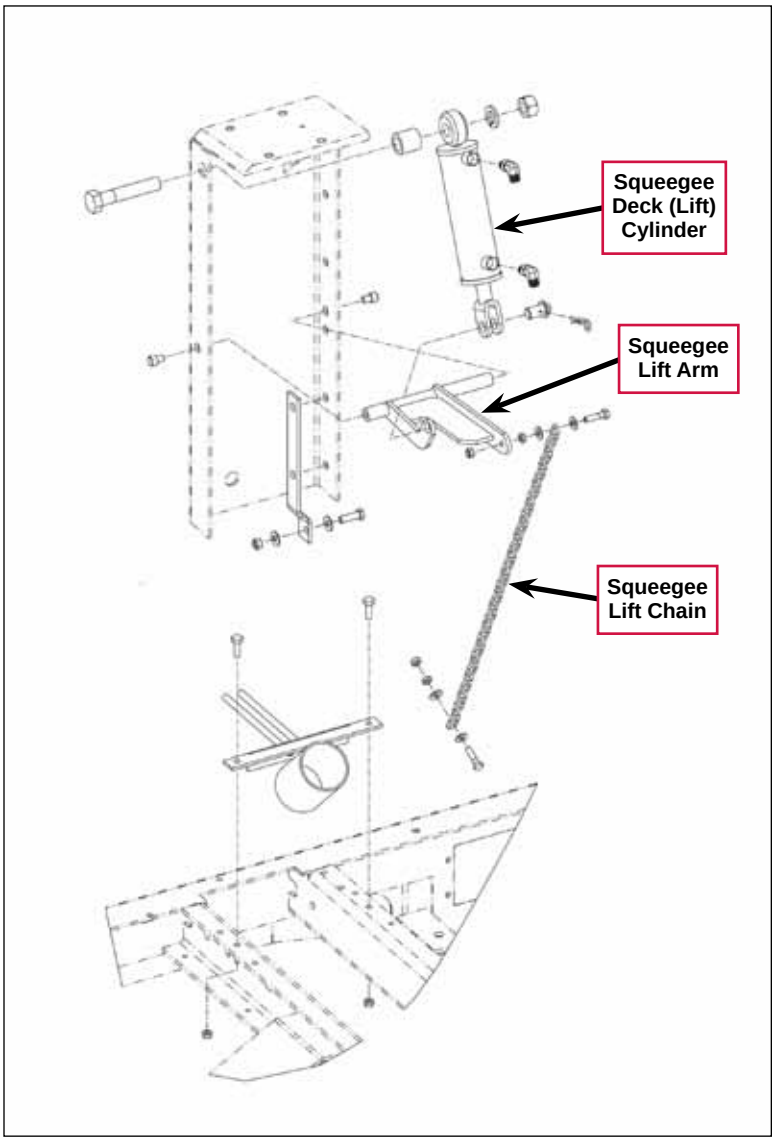

Squeegee Deck Cylinder and Control Valves

The top port on the **Squeegee Deck Cylinder** is connected to the **C3 Port** on the **Cylinder Control Valve**. The bottom port on the **Squeegee Deck Cylinder** is connected to the **C4 Port** on the **Cylinder Control Valve**.

The **Squeegee Cylinder Solenoid (7)** valve controls the oil flow to the **Squeegee Deck Cylinder**. The **Squeegee Lock Up (10)** solenoid valve holds the squeegee up when the engine is shut off.

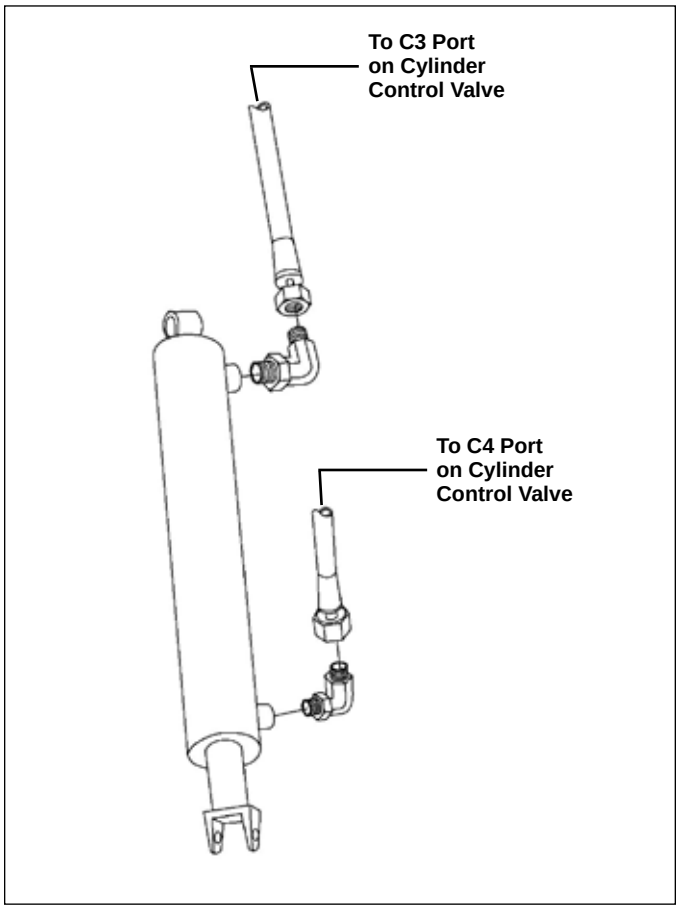

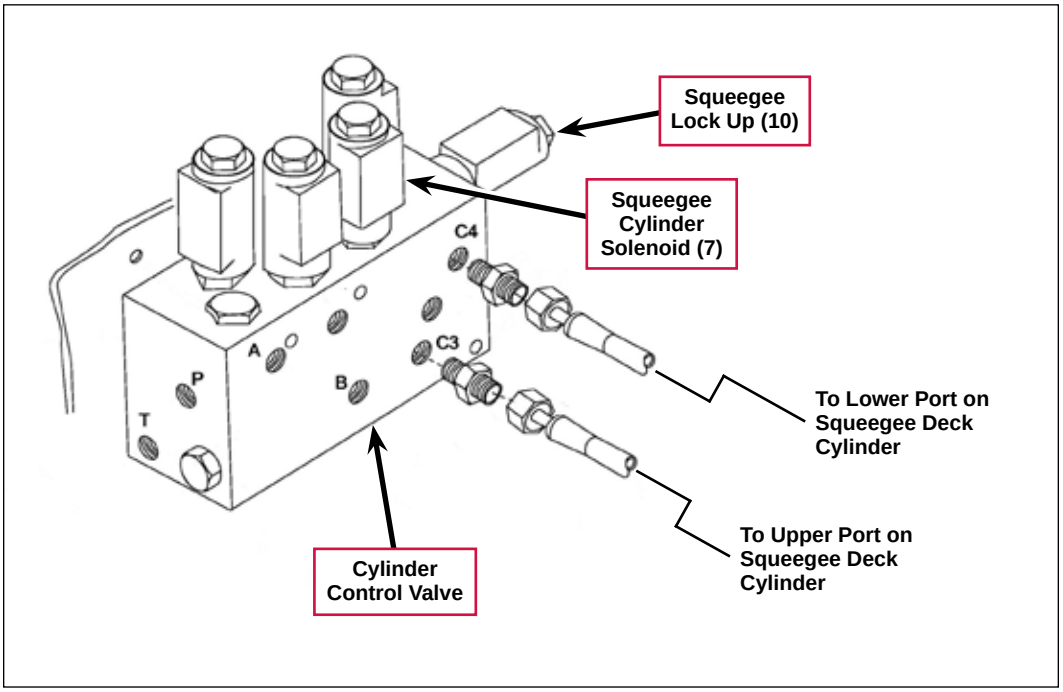

Squeegee System Wiring Diagram

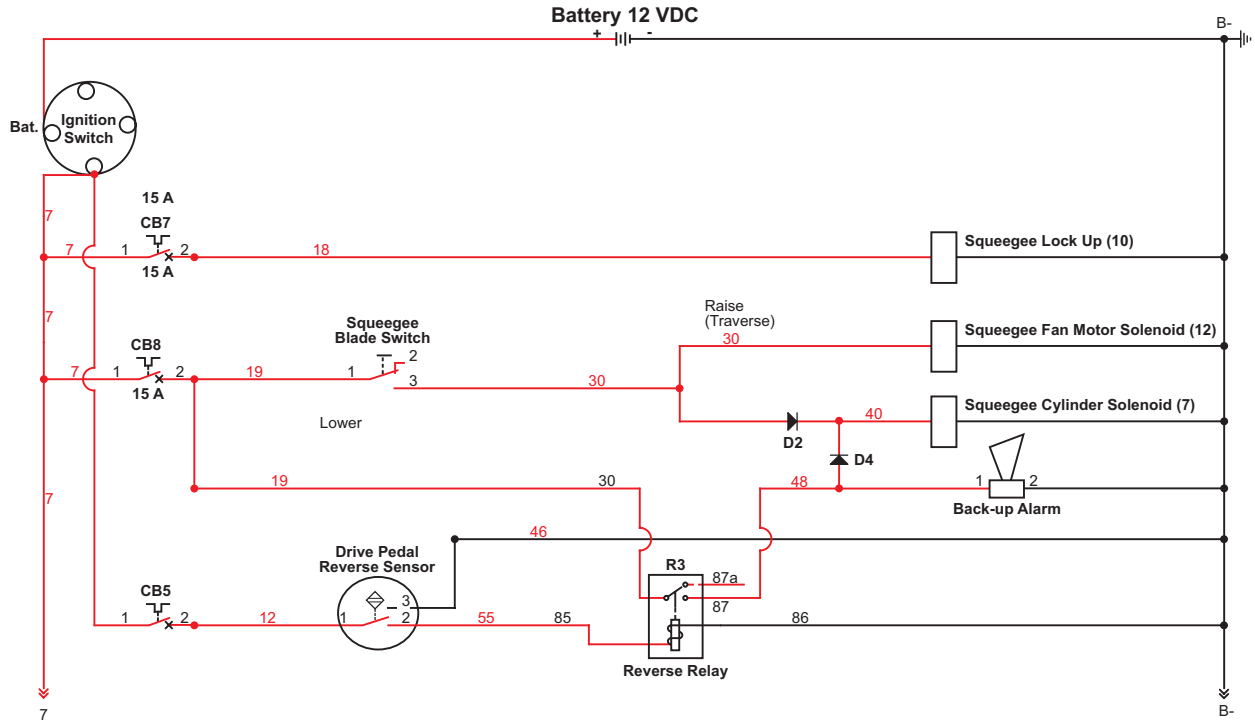

Circuit Description

The **Squeegee Lock Up (10)** solenoid valve blocks the bottom port on the squeegee deck cylinder to hold the squeegee up in its retracted position when the machine is shut off.

- When the key switch is on, the **Squeegee Lock Up (10)** solenoid valve is energized (open) to allow the hydraulic oil to flow from the bottom port on the squeegee deck cylinder.
- When the key switch is off, the **Squeegee Lock Up (10)** solenoid valve is de-energized (closed) to prevent the hydraulic oil from flowing from the bottom port on the squeegee deck cylinder.

The **Squeegee Cylinder Solenoid (7)** controls the hydraulic oil flow to the squeegee deck cylinder.

- When the **Squeegee Blade Switch** on the instrument panel is set to the squeegee-lower position (**Squeegee Blade Switch** position **2**), the **Squeegee Cylinder Solenoid (7)** is de-energized to direct the hydraulic oil to the top port on the squeegee deck cylinder to lower the squeegee.
- When the **Squeegee Blade Switch** on the instrument panel is set to the squeegee-raise position (**Squeegee Blade Switch** position **3**), the **Squeegee Cylinder Solenoid (7)** is energized to direct the hydraulic oil to the bottom port on the squeegee deck cylinder to raise the squeegee.
- When the drive pedal moves to the reverse position, the **Drive Pedal Reverse Sensor** switches to position **2**. This energizes the **Reverse Relay** coil (or the Power Relay coil on late models which in turn energizes the reverse relay. See Rev C electrical ladder diagram) and switches the **Reverse Relay** to position **87** which:
  - Energizes the **Squeegee Cylinder Solenoid (7)** through diode **D4** to raise the squeegee, and,
  - Provides positive voltage to the **Back-up Alarm**.

  Note that diode **D2** prevents the **Reverse Relay** from energizing the **Squeegee Fan Motor Solenoid (12).** This allows the squeegee vacuum fan motor to continue to run when the machine is in reverse.

Also refer to the ***Squeegee System Hydraulic Diagrams*** section.

Squeegee System Hydraulic Diagrams

Squeegee Up, Key Switch Off

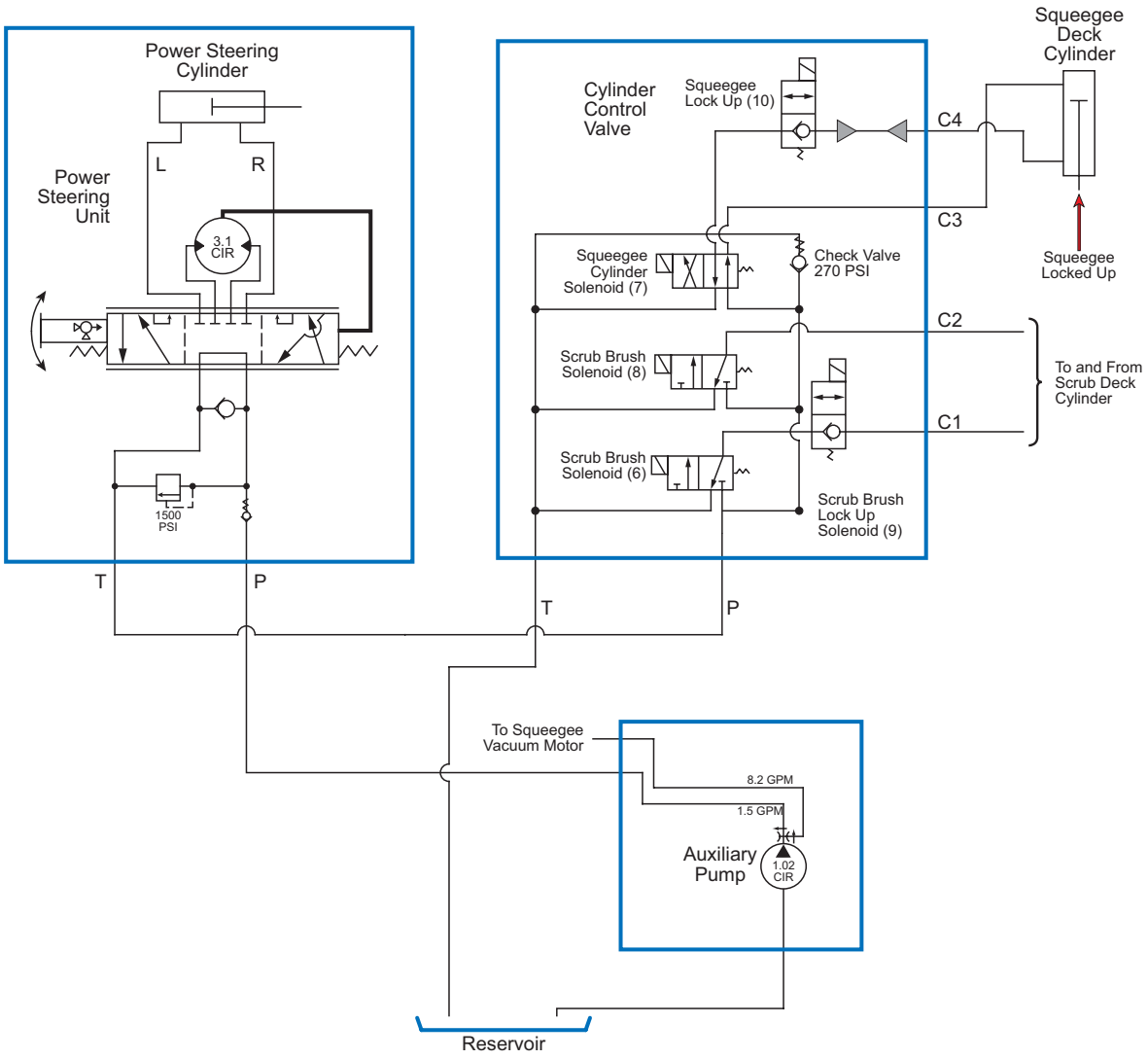

When the squeegee is up and the machine is shut off, the **Squeegee Lock Up (10)** solenoid valve is de-energized to block the oil flow from the lower port on the **Squeegee Deck Cylinder**. This holds the squeegee up in the retracted position when the machine is shut off.

Squeegee Up, Engine Running

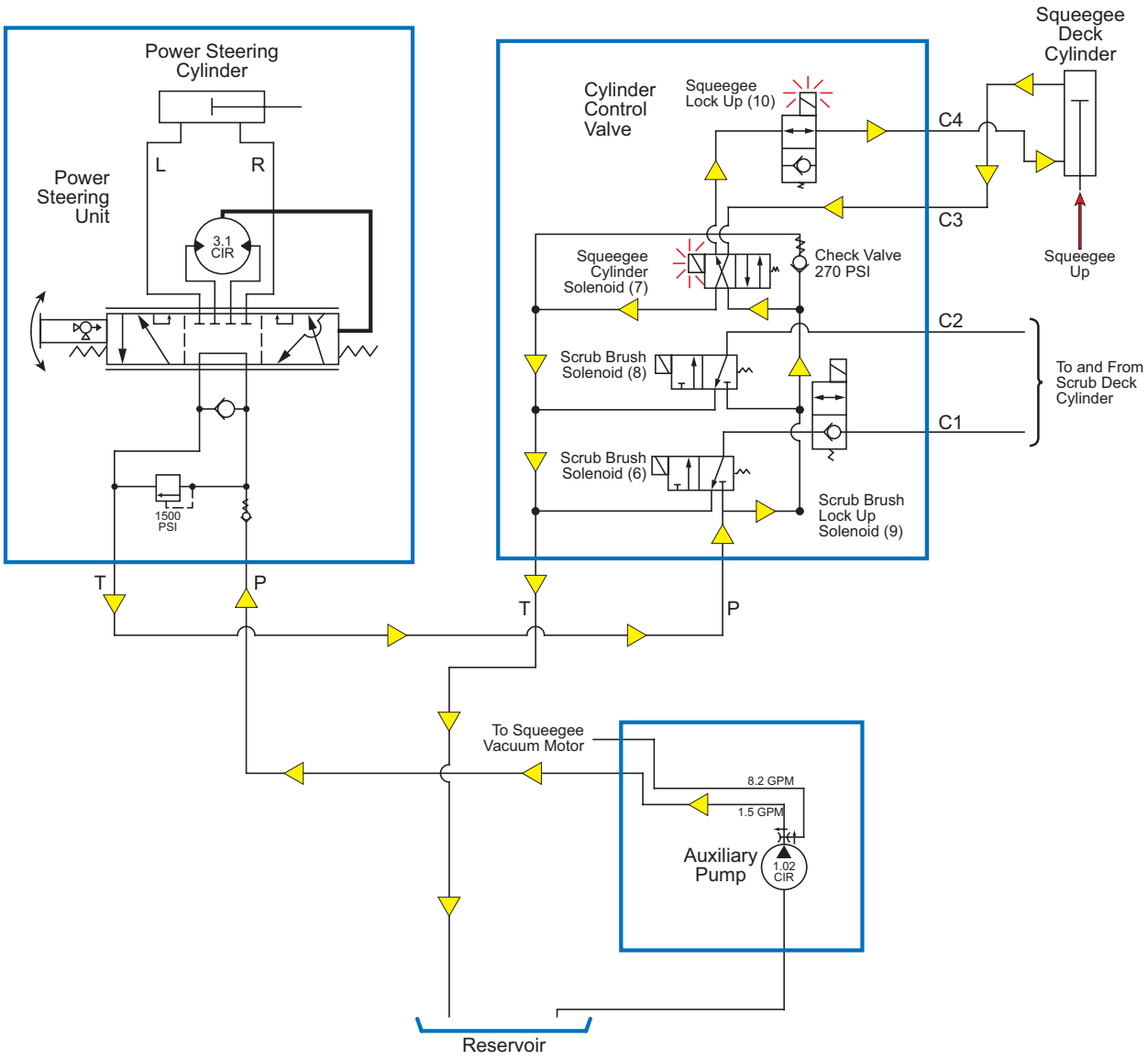

When the engine is running and the squeegee blade switch is set to the squeegee-raise position, the **Squeegee Lock Up (10)** solenoid valve and **Squeegee Cylinder Solenoid (7)** are both energized. This directs the hydraulic oil to the bottom port on the **Squeegee Deck Cylinder** to raise the squeegee.

Note that the **Squeegee Cylinder Solenoid (7)** will also be energized to raise the squeegee when the drive pedal is moved to reverse and actuates the reverse relay.

Squeegee Down, Engine Running

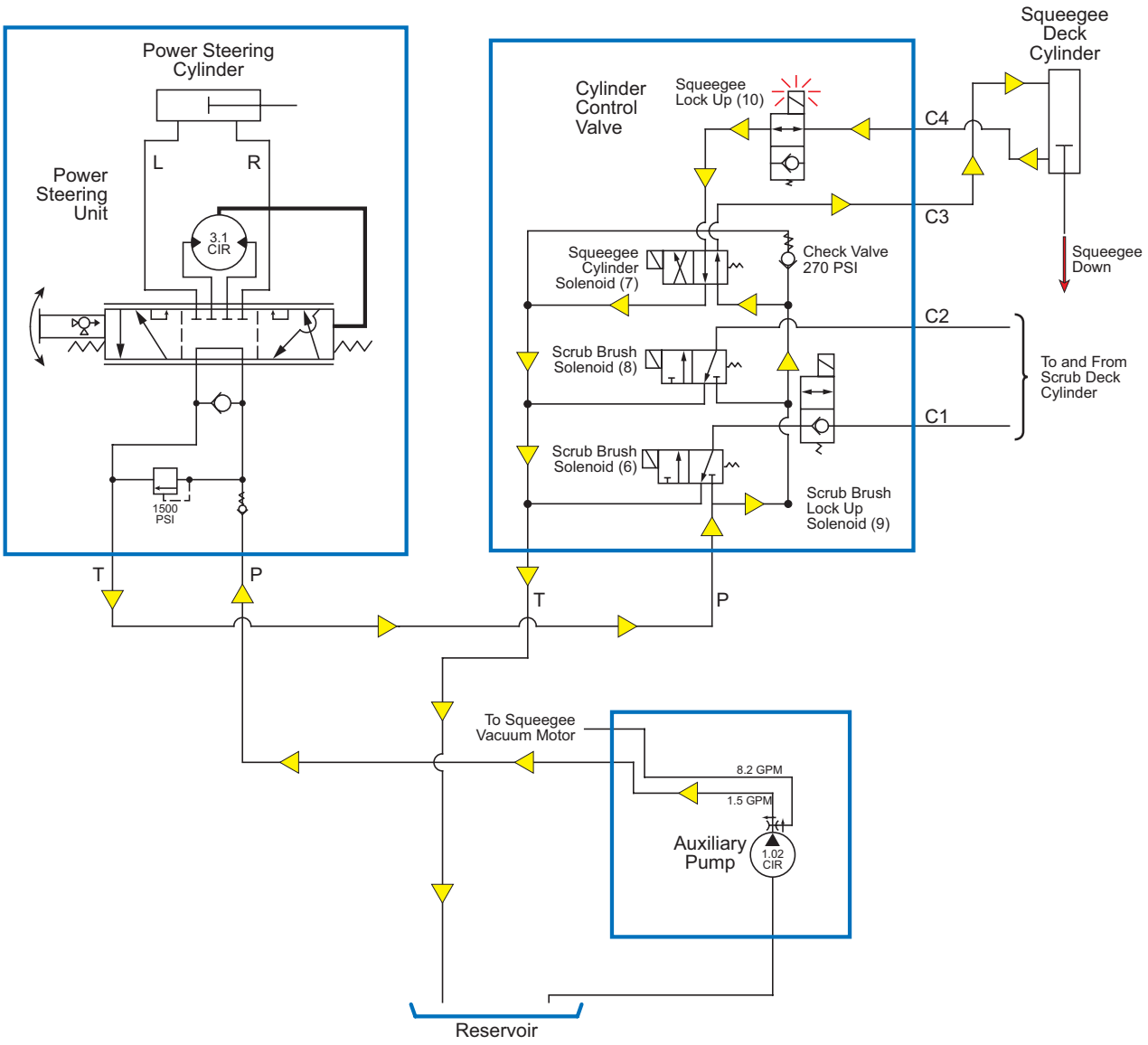

When the engine is running and the squeegee blade switch is set to the squeegee-lower position, the **Squeegee Lock Up (10)** solenoid valve is energized and the **Squeegee Cylinder Solenoid (7)** is de-energized. This directs the hydraulic oil to the top port on the **Squeegee Deck Cylinder** to lower the squeegee.

Component Locations

The following components are included in this section:

- Rear Squeegee Assembly
- Swing Squeegee Support
- Squeegee Lift
- Cylinder Control Valve

The **Rear Squeegee Assembly** is mounted to the **Squeegee Support Weldment** on the rear of the machine.

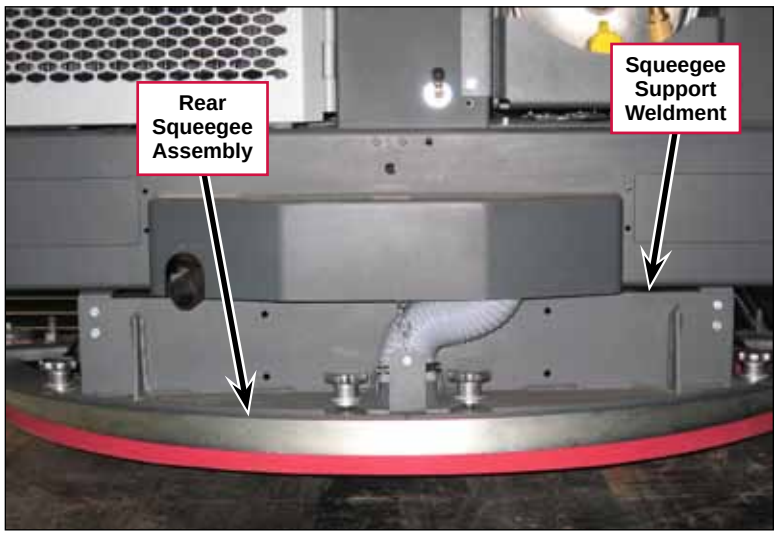

The swing squeegee support connects the rear squeegee assembly to the machine frame. The **Squeegee Arms** form parallel linkages to maintain the squeegee angle when the squeegee is raised and lowered.

The **Squeegee Supports** pivot on **Shafts** to allow the squeegee to move side to side.

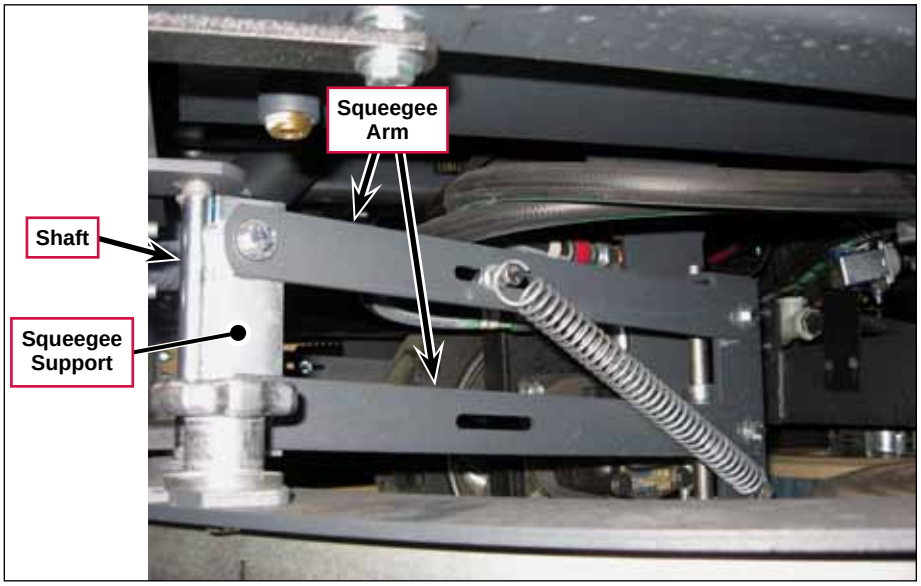

The squeegee lift includes the **Squeegee Deck (Lift) Cylinder** and **Squeegee Lift Arm**. The **Squeegee Deck (Lift) Cylinder** is attached to the machine frame on the upper right rear of the machine, behind the battery. The **Squeegee Deck (Lift) Cylinder** raises and lowers the pivoting **Squeegee Lift Arm** which raises and lowers the lift chain connected to the squeegee.

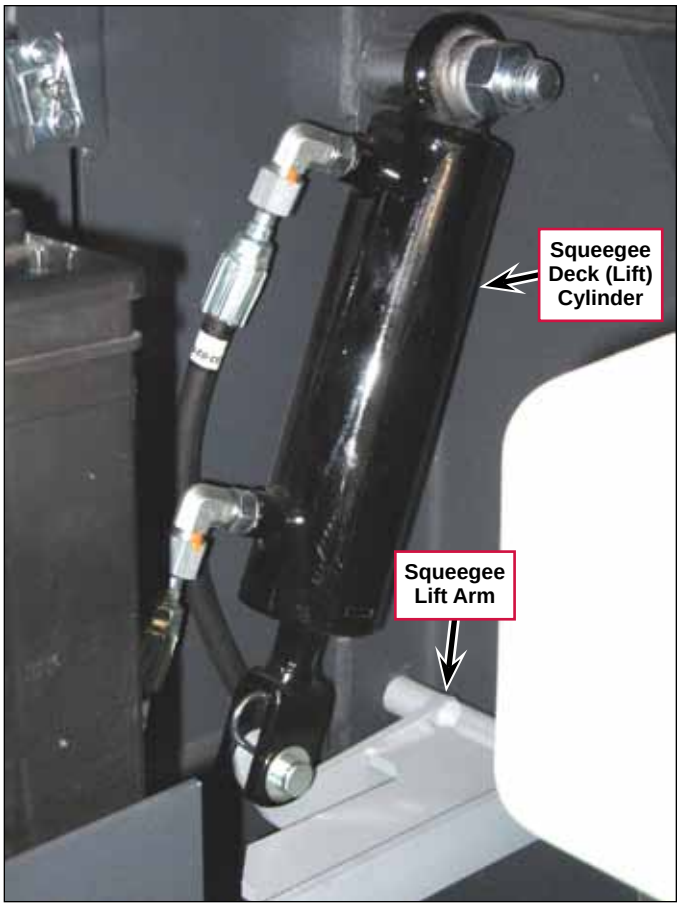

The **Squeegee Cylinder Solenoid (7)** and **Squeegee Lock Up (10)** solenoid are part of the **Cylinder Control Valve** located below the access panel on the floor of the Operator compartment.

The hydraulic hose from **Port C3** on the **Cylinder Control Valve** is connected to the upper port on the squeegee deck cylinder.

The hydraulic hose from **Port C4** on the **Cylinder Control Valve** is connected to the lower port on the squeegee deck cylinder.

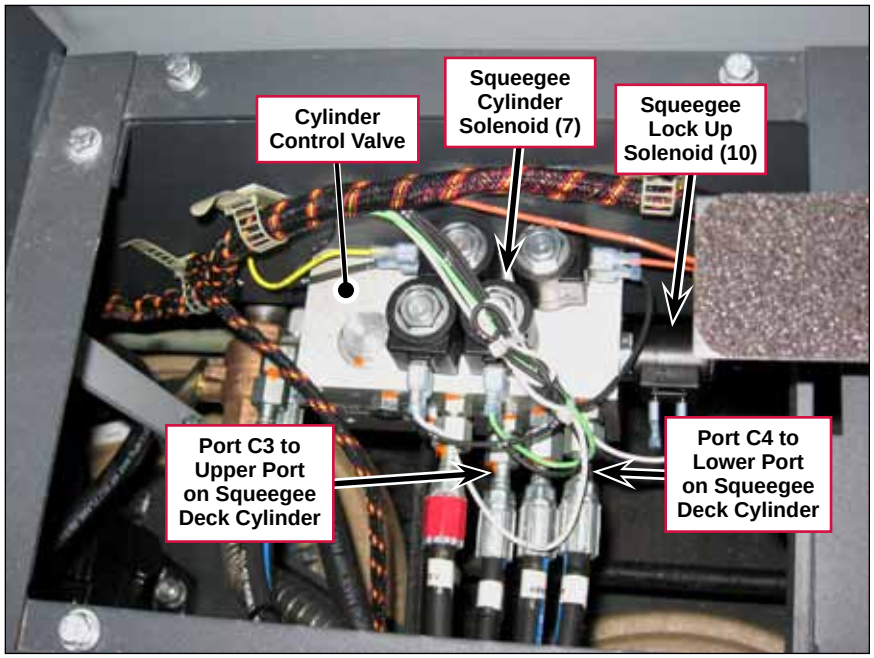

Troubleshooting

General Troubleshooting

Problem	Cause	Correction
Poor Water Pick-up.	The squeegee blades are torn or worn.	Check and replace the blades as necessary.
	The squeegee assembly is out of adjustment.	Readjust the squeegee. (Refer to the Instructions for Use.)
The squeegee deck will not extend downward.	No voltage to the Squeegee Lock Up (10) solenoid valve.	1. Check circuit breaker CB7 and reset if necessary. 2. Check the wiring from CB7 to the Squeegee Lock Up (10) solenoid valve and repair as necessary.
	The Squeegee Lock Up (10) solenoid valve in the Cylinder Control Valve not opening when energized (stuck closed).	1. Check the coil resistance of the Squeegee Lock Up (10) solenoid valve. If the coil resistance is not 9.8 ohms ±10%, replace the coil. 2. If the coil resistance is within spec, check for binding or a mechanical problem. Repair or replace the valve as necessary.
	The squeegee is binding.	Check for binding or damage in the squeegee lift mechanism and mounting hardware and correct as necessary.
Squeegee will not retract upward.	No voltage to the Squeegee Cylinder Solenoid (7) in the Cylinder Control Valve.	1. Check circuit breaker CB8 and reset if necessary. 2. Check the continuity from CB8 through the Squeegee Blade Switch to the Squeegee Cylinder Solenoid (7). There should be 12 VDC to the Squeegee Cylinder Solenoid (7) with the Squeegee Blade Switch in the squeegee-raise position.
	The Squeegee Cylinder Solenoid (7) in the Cylinder Control Valve not switching when energized.	1. Check the coil resistance of the Squeegee Cylinder Solenoid (7). If the coil resistance is not 9.8 ohms ±10%, replace the coil. 2. If the coil resistance is within spec, check for binding or a mechanical problem. Repair or replace the valve as necessary.
	The squeegee is binding.	Check for binding or damage in the squeegee lift mechanism and mounting hardware and correct as necessary.
Squeegee will not rise when the drive pedal is moved to the reverse position.	No voltage to the Squeegee Cylinder Solenoid (7) in the Cylinder Control Valve.	• Check the drive pedal reverse sensor function. The drive pedal reverse sensor should provide 12 VDC to the reverse relay coil when the drive pedal is moved to the reverse position. • Check the reverse relay function The reverse relay should switch to position 87 and provide 12 VDC to the Squeegee Cylinder Solenoid (7) when the drive pedal is moved to the reverse position.

Specifications

Component	Specifications
Squeegee Lock Up (10) Solenoid Valve	Initial Current – 1.22 amps
Squeegee Cylinder Solenoid (7) Valve	Nominal Coil Resistance – 7.2 ohms

Steering System

Functional Description

Overview

The steering system includes the power steering unit, **Power Steering Cylinder**, **Rack** and **Spur Gear**.

The steering wheel rotates the shaft on the power steering unit which controls the oil flow to the **Power Steering Cylinder**. The **Power Steering Cylinder** extends and retracts the attached **Rack**, which then rotates the **Spur Gear** and attached **Rear Wheel Support** to turn the **Rear** (drive) **Wheel**.

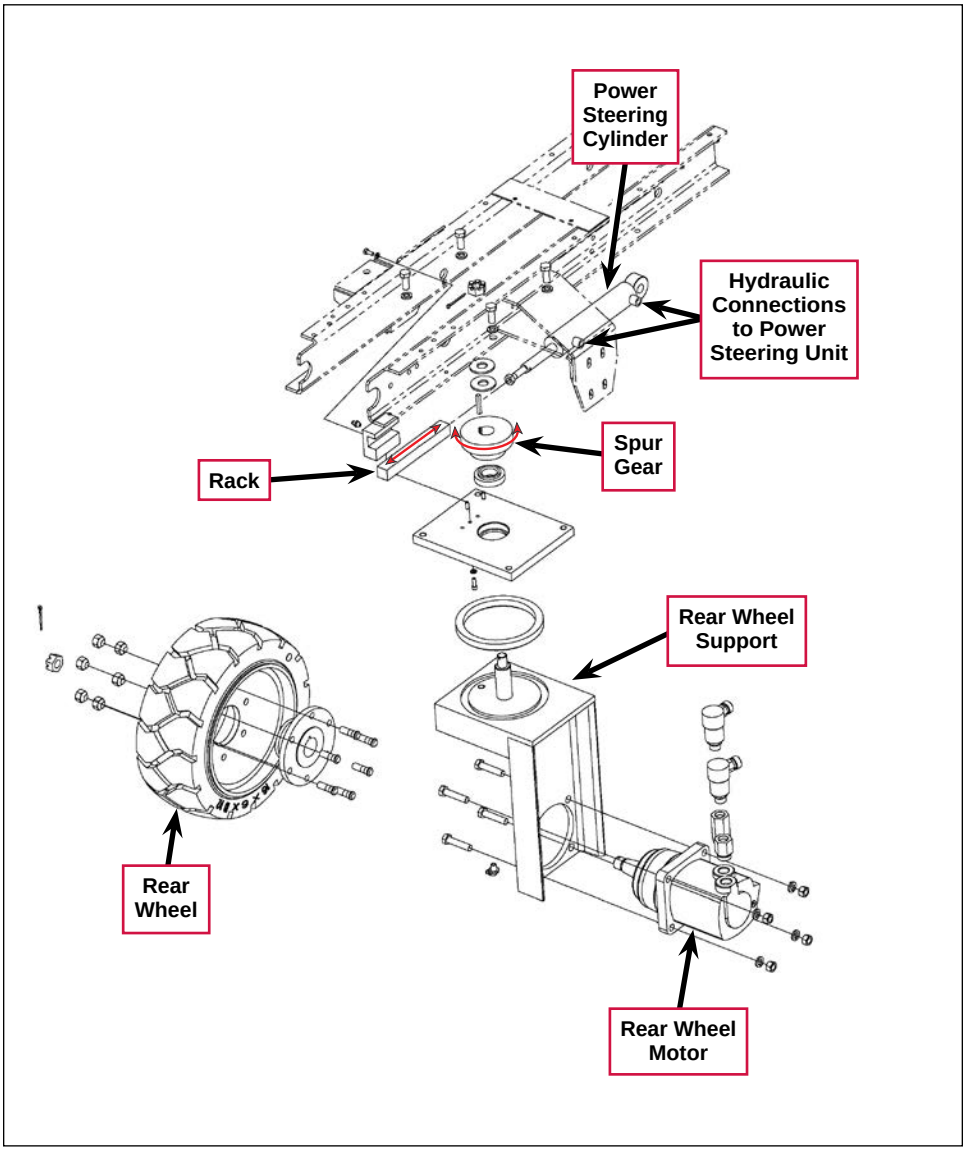

The **Power Steering Unit** is mounted to the **Steering Weldment Housing** and **Steering Column Assembly** and is driven by the **Steering Wheel**.

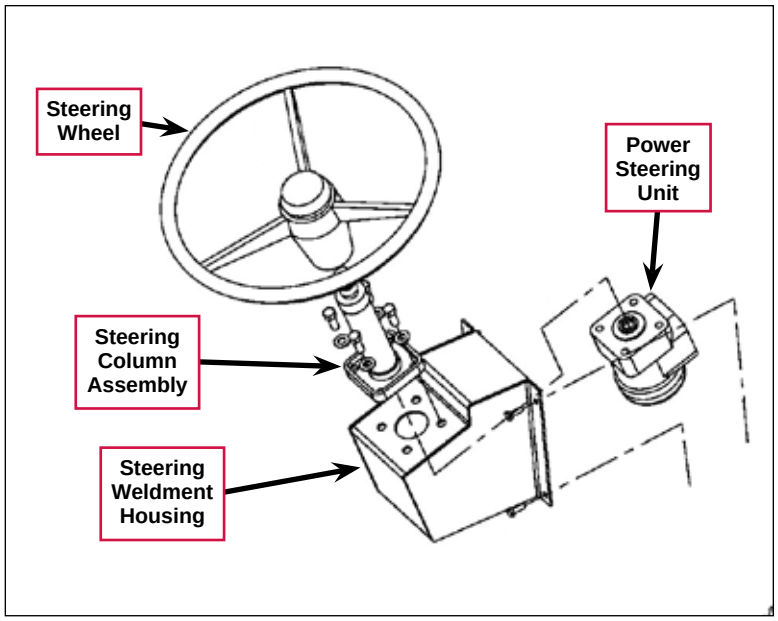

The priority port on the auxiliary pump supplies hydraulic oil to the **Power Steering Unit**. The oil from the "T" port of the **Power Steering Unit** goes to the pressure side ("P" port) on the Cylinder Control Valve.

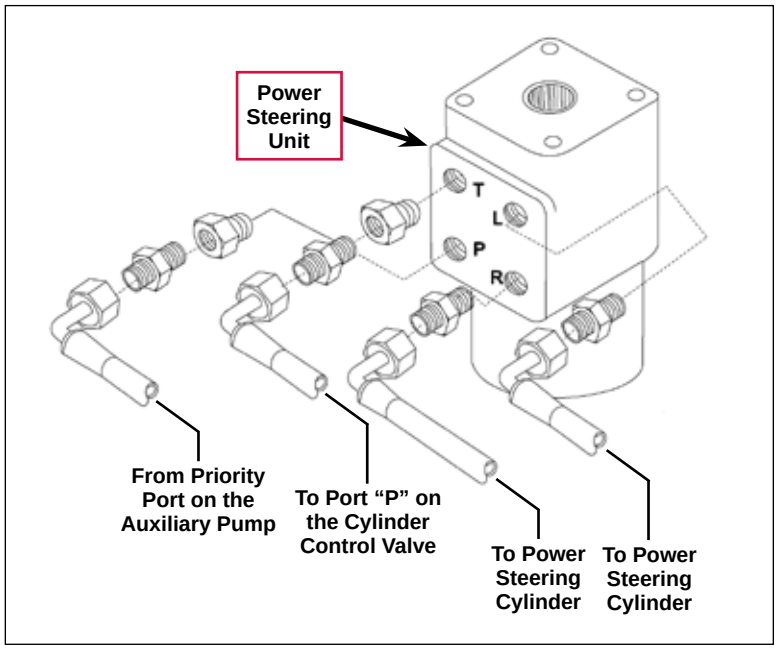

The **Power Steering Cylinder** is connected to the "R" and "L" ports on the **Power Steering Unit**.

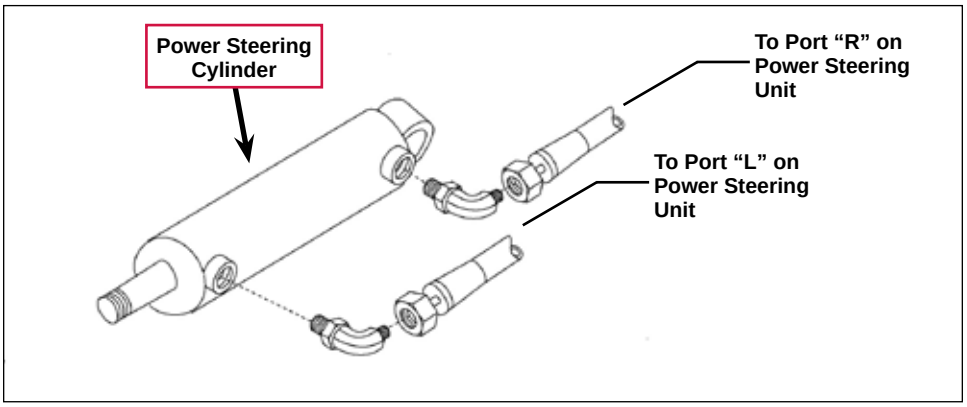

Hydraulic Diagrams

Power Steering Unit Description

The **Power Steering Unit** uses the input from the steering wheel to turn the drive wheel in the appropriate direction to steer the machine. When the Operator turns the steering wheel, the steering wheel shaft rotates the rotary **Valve** spool and **Gerotor Metering Mechanism**, which are connected by the **Direct Mechanical Link** inside of the **Power Steering Unit**.

- The direction in which the **Valve** moves determines which side of the **Power Steering Cylinder** receives the hydraulic oil to turn the drive wheel left or right. Note that when the Operator stops turning the steering wheel, the springs in the **Power Steering Unit** return the **Valve** to the neutral (closed) position to hold the **Power Steering Cylinder** rod in its current position.
- The number of degrees that the **Gerotor Metering Mechanism** rotates determines the volume of oil that the **Power Steering Cylinder** receives from the **Valve**. This allows the drive wheel to turn in proportion to the steering wheel rotation.

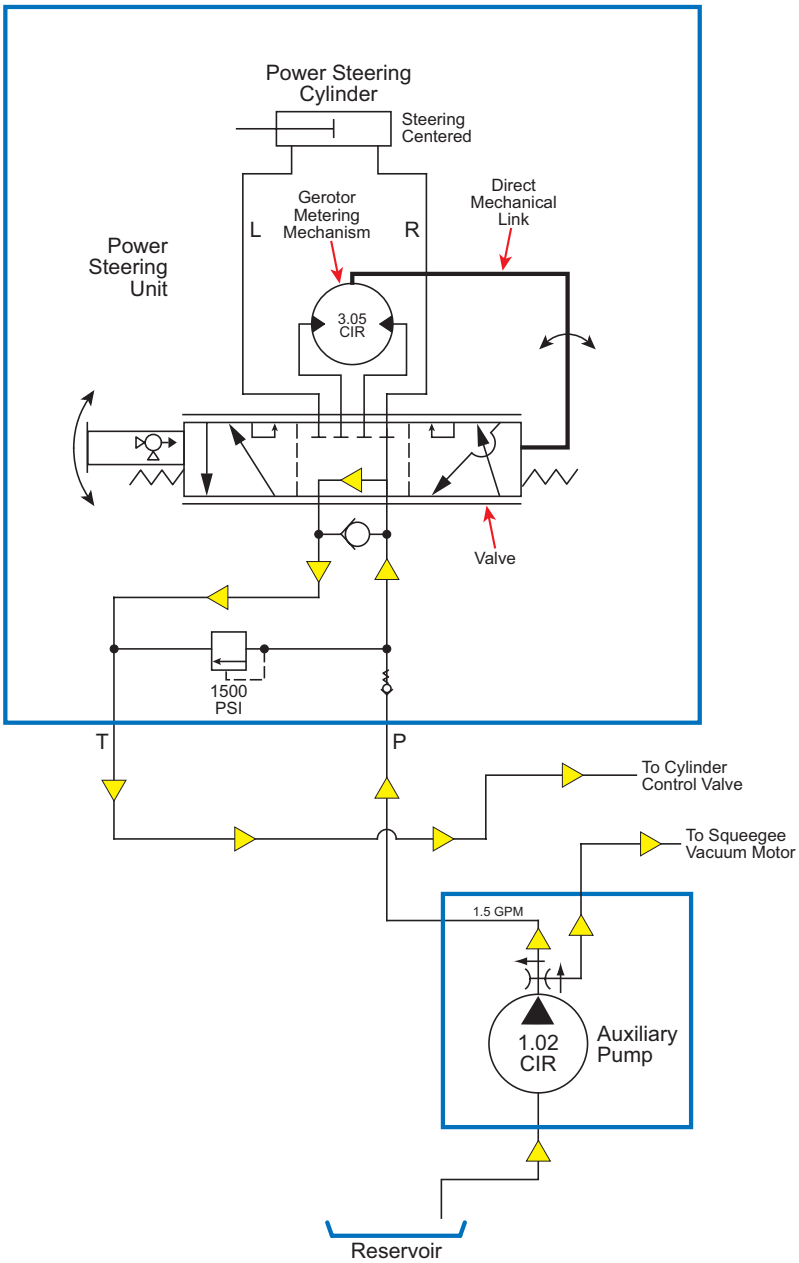

Steering Wheel Stationary

When the engine is running, the **Auxiliary Pump** sends oil through the priority flow divider to the "**P**" port on the **Power Steering Unit**. When the steering wheel is stationary, the **Valve** is in its neutral (closed) position. The hydraulic oil flows through the U-shaped ports in the **Valve**, through the "**T**" port on the **Power Steering Unit**, then to the **Cylinder Control Valve**. Note that when the steering wheel is stationary, the **Valve** ports are blocked and the **Power Steering Cylinder** will maintain its current position.

Steering Wheel Turned Toward the Right

When the Operator turns the steering wheel to the right, the **Valve** directs the hydraulic oil to the corresponding side of the **Gerotor Metering Mechanism**. The **Gerotor Metering Mechanism** sends the appropriate volume of oil to the **Power Steering Cylinder** corresponding to the amount of steering wheel rotation.

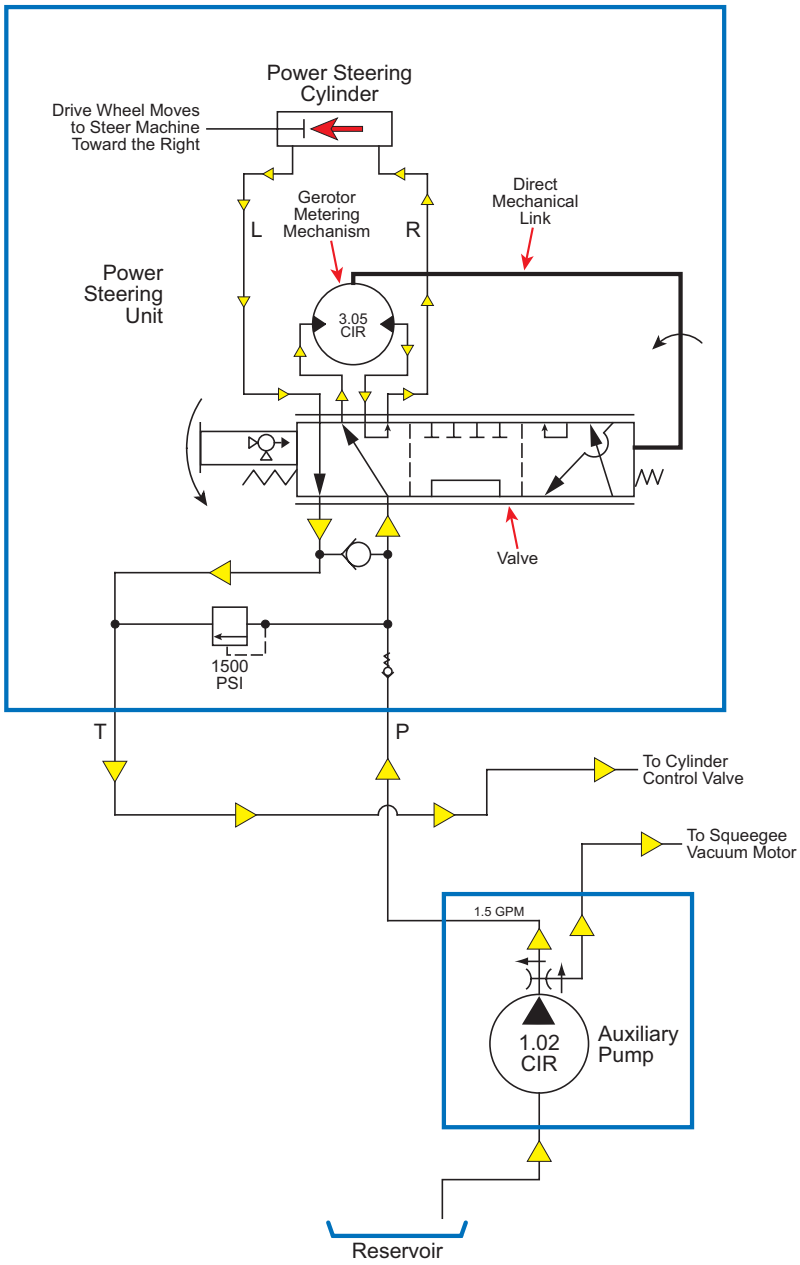

Steering Wheel Turned Toward the Left

When the Operator turns the steering wheel to the left, the **Valve** directs the hydraulic oil to the opposite side of the **Gerotor Metering Mechanism**. The **Gerotor Metering Mechanism** again sends the appropriate volume of oil to the **Power Steering Cylinder** corresponding to the amount of steering wheel rotation.

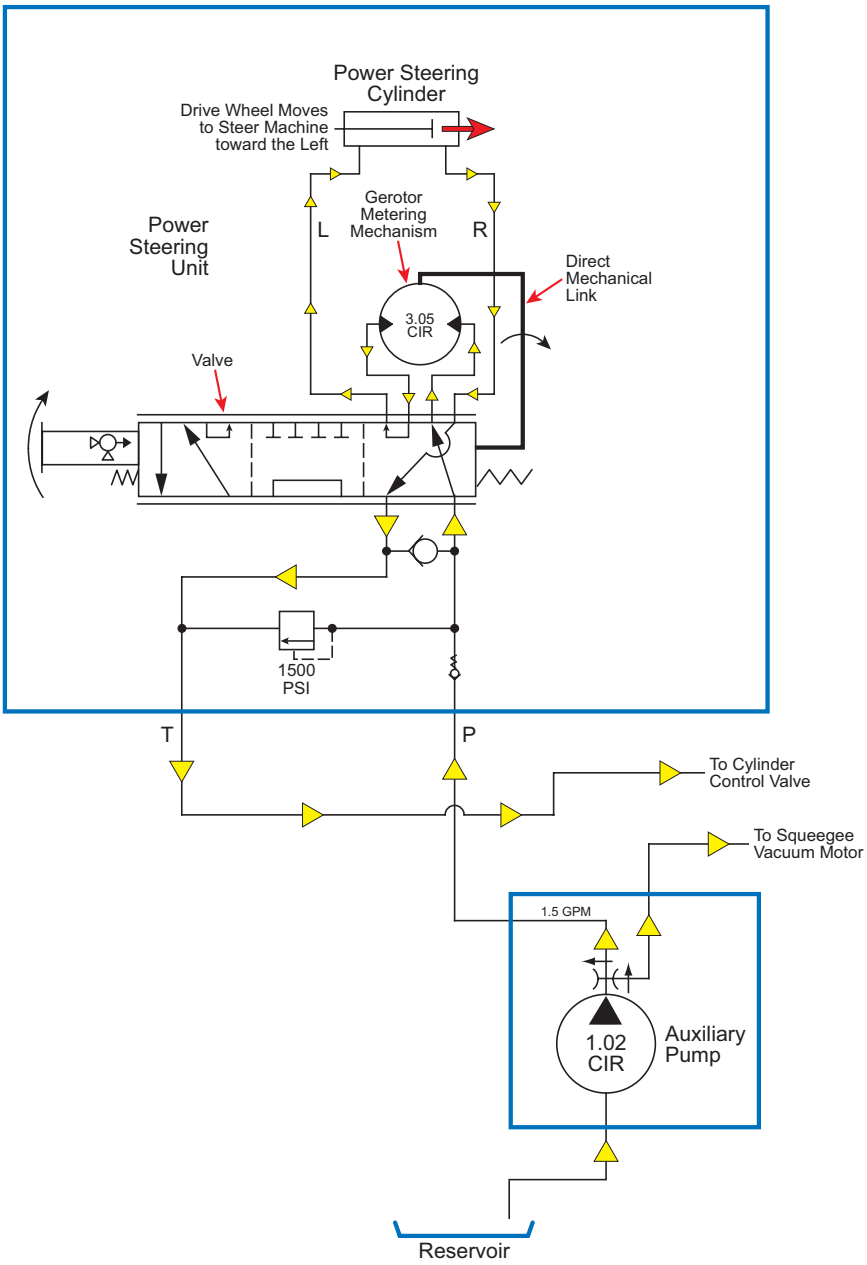

Steering Wheel Held in Full Right or Left Position

When the steering wheel is held to the stop in its full-right or full-left turn position (full-right is shown here), the **Relief Valve** opens up to allow the hydraulic oil to pass through the **Relief Valve** and to the **Cylinder Control Valve**.

The **Relief Valve** will also open if something is preventing the drive wheel from rotating to steer.

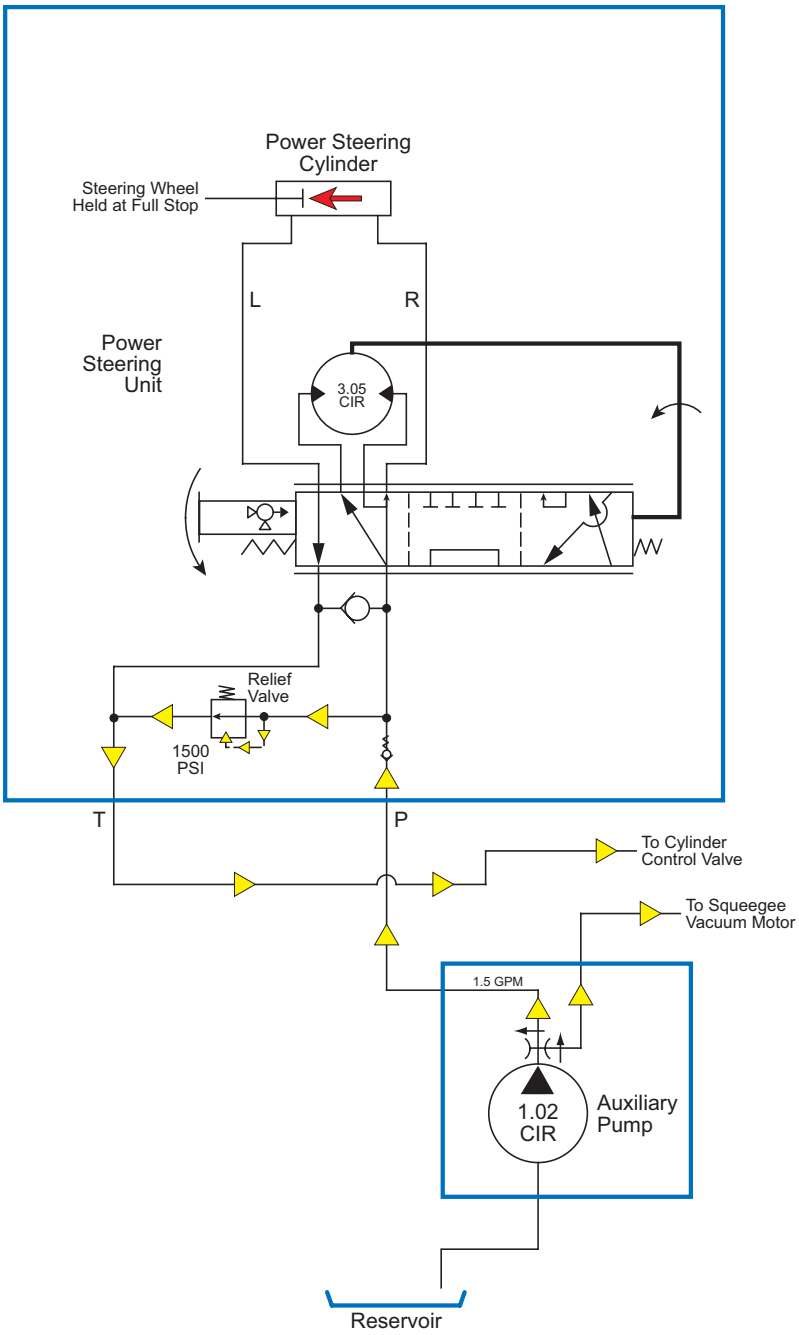

Turning the Steering Wheel with the Engine Off

When the engine is off and no hydraulic oil is being pumped to the **Power Steering Unit**, the **Gerotor Metering Mechanism** acts like a pump when the steering wheel is turned. The **Check Valve** allows the oil pumped from the **Gerotor Metering Mechanism** to flow to and from the **Power Steering Cylinder** to allow the machine to be steered manually with the engine off.

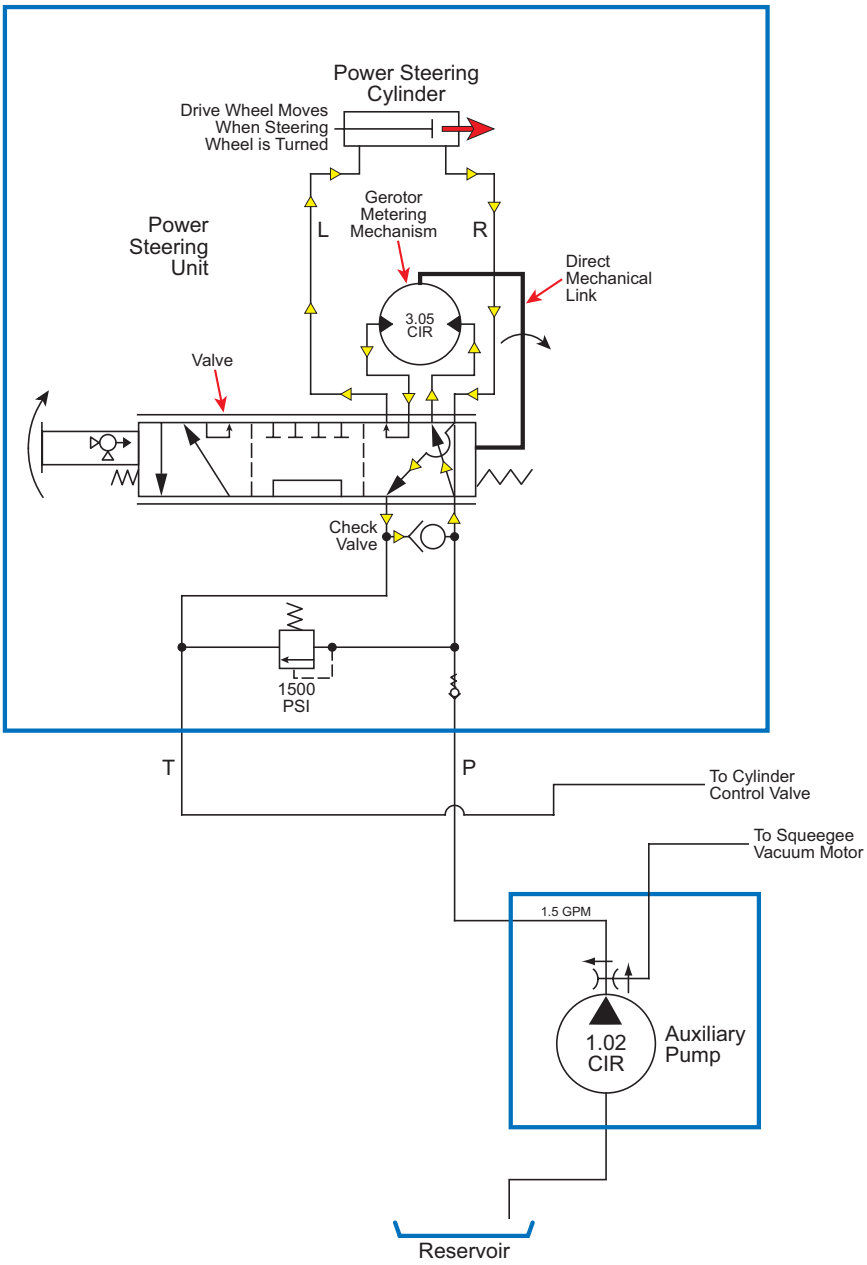

Maintenance

Warning! ***Make sure the steering system and surrounding components are cool to the touch before attempting to grease the steering system lubrication fittings. Failure to observe this safety precaution can result in severe burns.***

Grease the **Rack**, and the **Lubrication Fittings** on the bottom of the **Rear Wheel Support** and on the **Rack Guide** every 100 hours of operation. Note that the **Rear Wheel Support Lubrication Fitting** is mounted on the bottom of the **Rear Wheel Support**. There is a **Cutout** in the frame to allow access to the **Rack Guide Lubrication Fitting**.

Service Note: *To grease the **Rack**, turn the steering wheel all the way toward the right. This will extend the **Rack** toward the rear of the machine to allow you to grease the teeth on the **Rack**.*

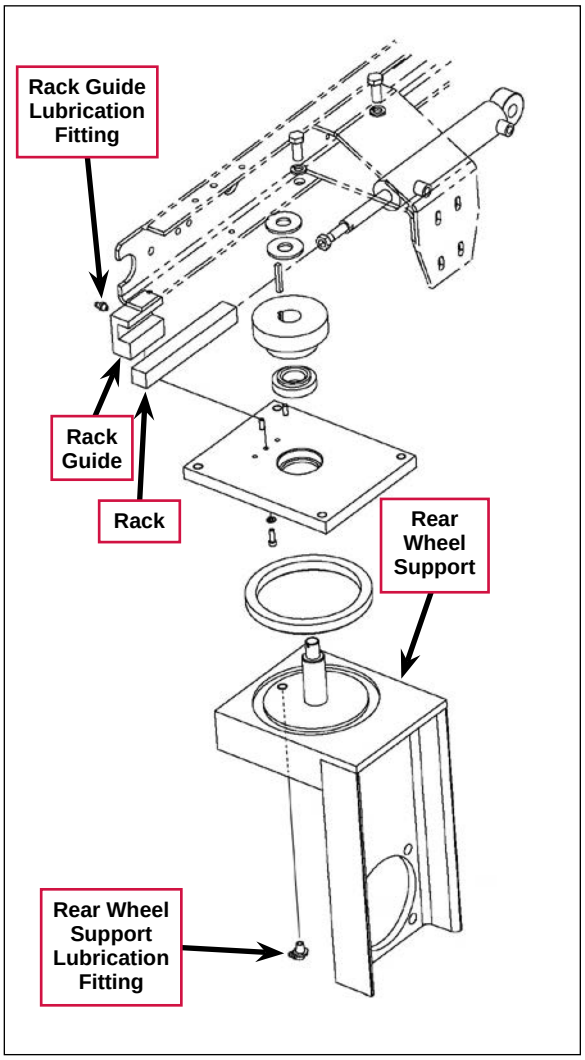

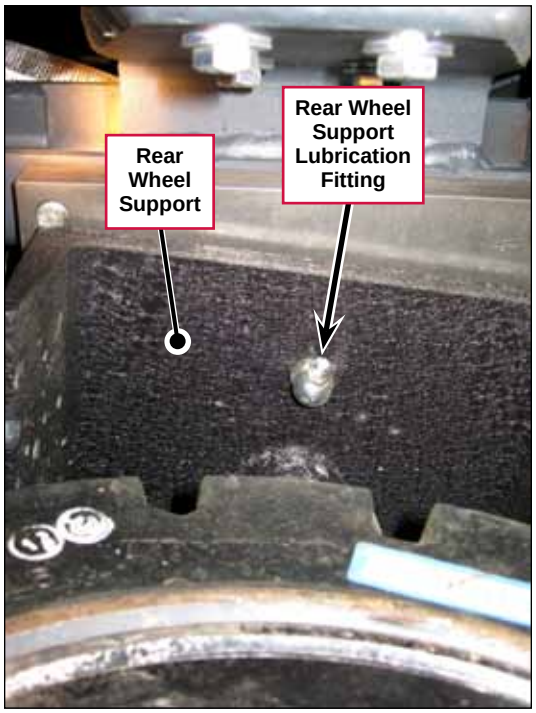

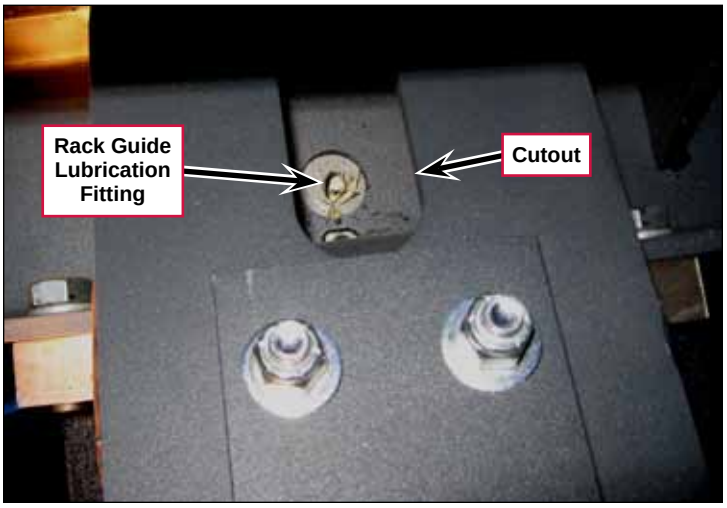

Troubleshooting

Problem	Cause	Correction
The steering “wanders”.	Backlash in the spur gear and rack	Adjust the rack so it’s closer to the spur gear.
The steering is hard or “jerky”.	Not enough oil to the steering system	Check the pump output and correct as necessary. Check the priority flow divider and correct/replace as necessary.

Removal and Installation

Warning! ***Before removing or reinstalling any machine components, make sure the key switch is off, the key is removed from the machine and the parking brake is engaged.***

Note: *If the steering cylinder is removed, mark the teeth where the rack engages the spur gear so the rack and spur gear engage at the same location when the steering cylinder is reinstalled.*

Specifications

Component	Specifications
Steering	Rear wheel, hydraulic cylinder and rotary valve controlled
Power Steering Unit	Maximum System Pressure – 2030 psi [140 bar]
	Maximum Back Pressure – 150 psi [10.3 bar]
	Maximum Flow – 4 GPM [15.1 LPM]
	Displacement – 3.1 CIR
	Check Valve for Manual Steering – Yes
	Relief Valve Setting – 1500 psi [103.4 bar]

Sweep System, Main Broom

Functional Description

Overview

The main broom sweep system includes the main broom and lift linkage, hydraulic broom drive motor and the main broom solenoid valve. One of the 1.02 CIR auxiliary pumps powers the broom drive motor.

The Main Broom Switch on the instrument panel switches the main broom on and off. The Operator manually raises and lowers the main broom with the main broom lift control lever connected to a mechanical linkage.

Main Broom and Broom Drive Motor

The **Main Broom** is supported by **Broom Drive Arm** and **Idler Arm**. The **Hydraulic Broom Drive Motor** mounts to the **Broom Drive Arm** and drives the **Main Broom** via the **Broom Driver Hub**.

The **Broom Drive Arm** and **Idler Arm** are attached to the **Broom Chamber Shaft** which is located inside of the broom chamber.

The **Broom Chamber Shaft** clamps to the **Shaft** and attached **RH** and **LH Arm Assemblies**. The **Shaft**, **RH** and **LH Arm Assemblies** are located outside of the broom chamber and are sealed off from the broom chamber by the **Broom Arm Gaskets**.

The **RH** and **LH Arm Assemblies** pivot on the **Lift Pins** in the yokes on the machine frame to allow the main broom assembly to move up and down.

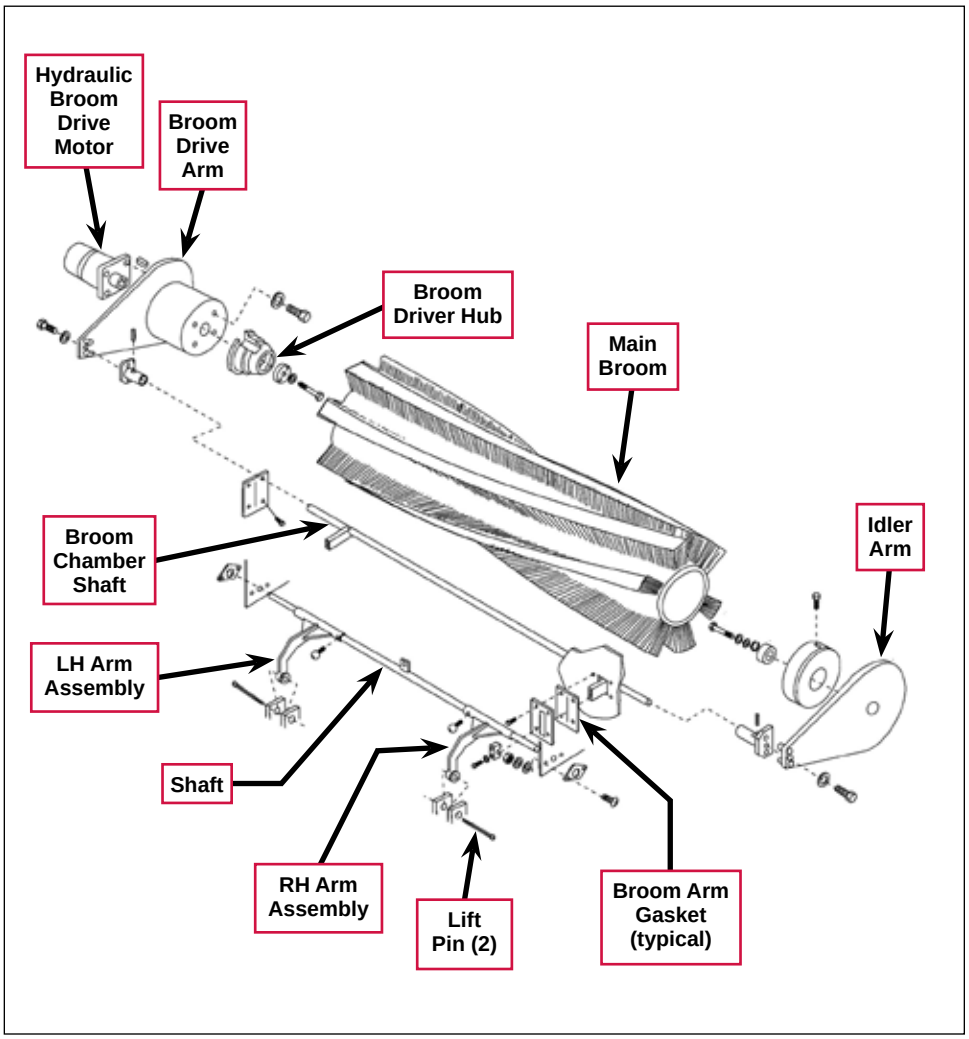

Main Broom Lift Linkage

Moving the **Main Broom Lift Control Lever** forward and backward extends and retracts the **Adjusting Rod**, which then rotates the **Crank**.

The **Crank** raises and lowers the **Broom Lift Link**, which then raises and lowers the **Shaft** to lift or lower the main broom assembly.

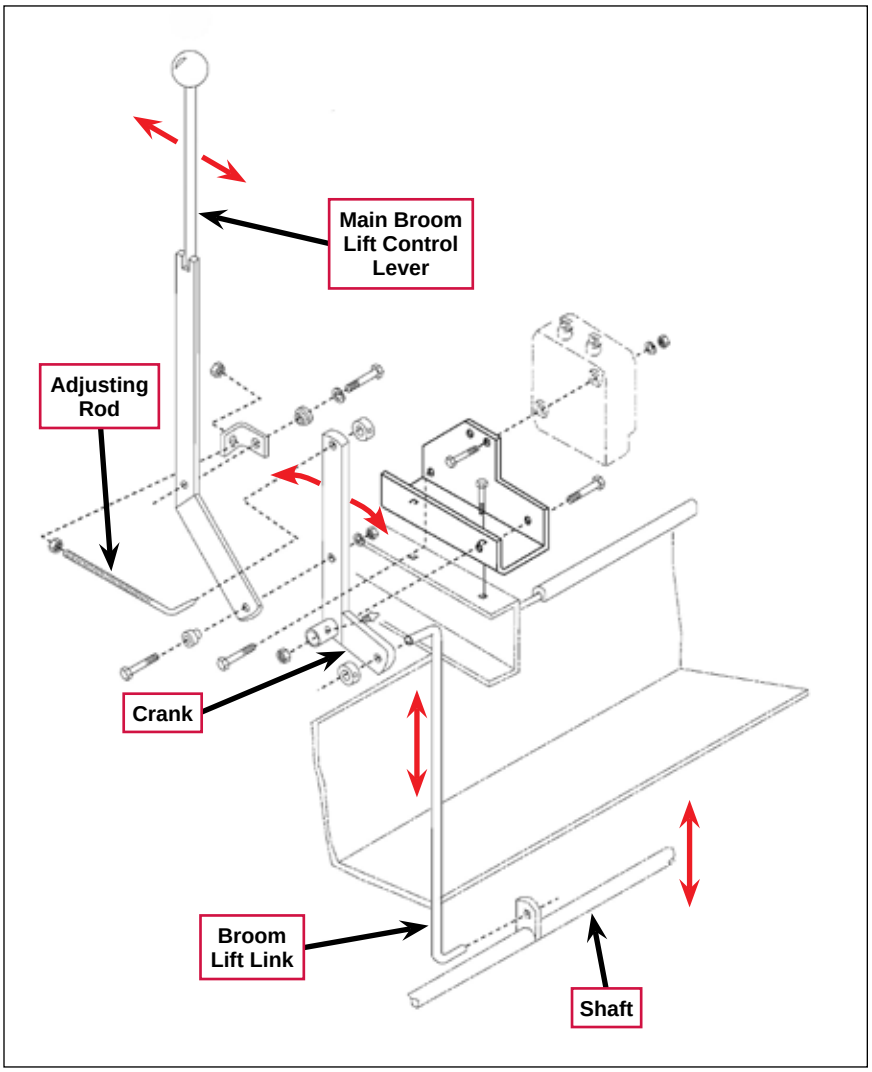

Main Broom Motor Control Valve

The **Main Broom Solenoid (2)** valve in the **Main Control Valve** supplies hydraulic oil to the main broom and dust control motors from **Port 1**. The oil returns from the motors to the **Main Control Valve** at **Port 2**.

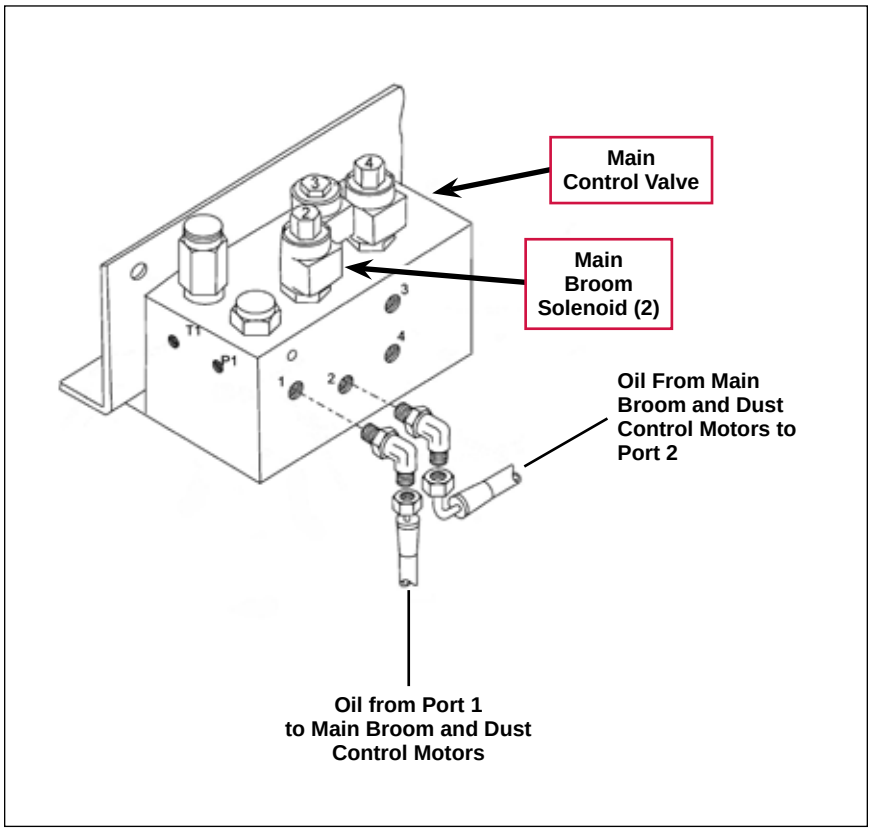

Main Broom Sweep System Wiring Diagram

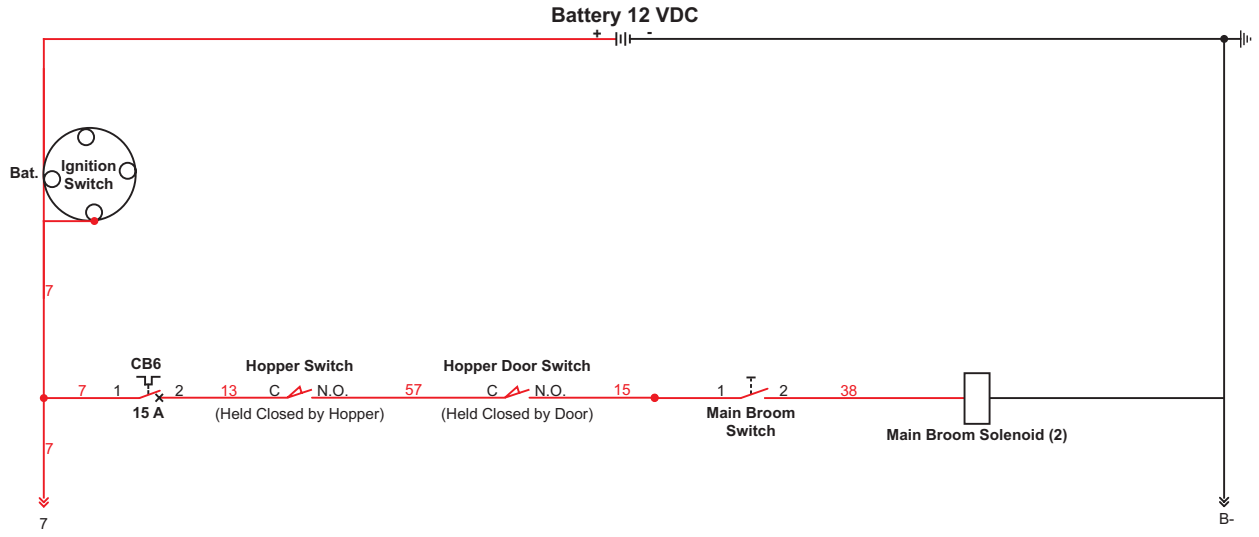

Circuit Description

The **Main Broom Solenoid (2)** valve in the main control valve controls the oil flow to the main broom motor. The main broom motor will run when the **Ignition Switch** is on and the **Main Broom Switch** on the instrument panel is switched on.

Note that the **Hopper Switch** and the **Hopper Door Switch** must both be closed for the main broom motor to operate.

Also refer to the ***Main Broom Sweep System Hydraulic Diagrams*** section.

Main Broom Sweep System Hydraulic Diagrams

Main Broom Motor Off

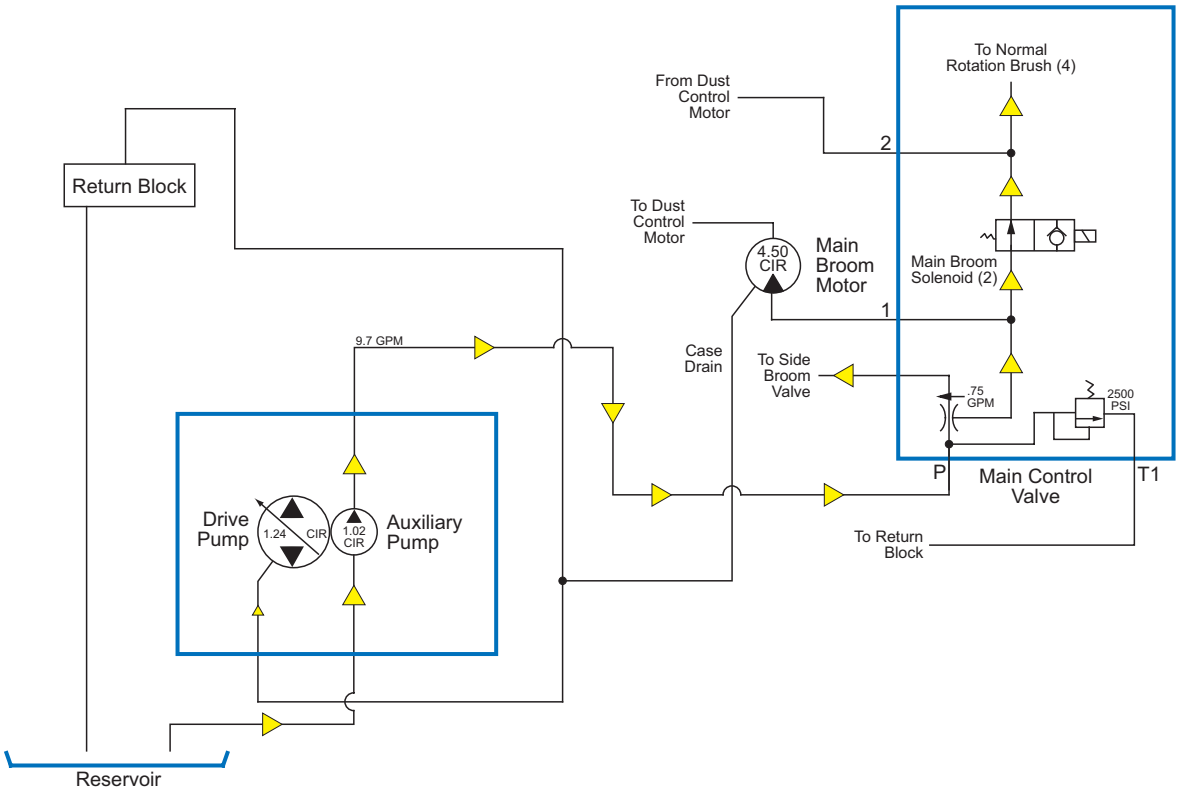

When the **Main Broom Motor** is off, the **Main Broom Solenoid (2)** is de-energized (open). This allows the hydraulic oil to flow from the **Auxiliary Pump** through non-priority leg of the priority flow divider, then through the **Main Broom Solenoid (2)** valve. The oil will then flow to the **Normal Rotation Brush (4)** solenoid valve, bypassing both the **Main Broom Motor** and the **Dust Control Motor**.

Main Broom Motor On

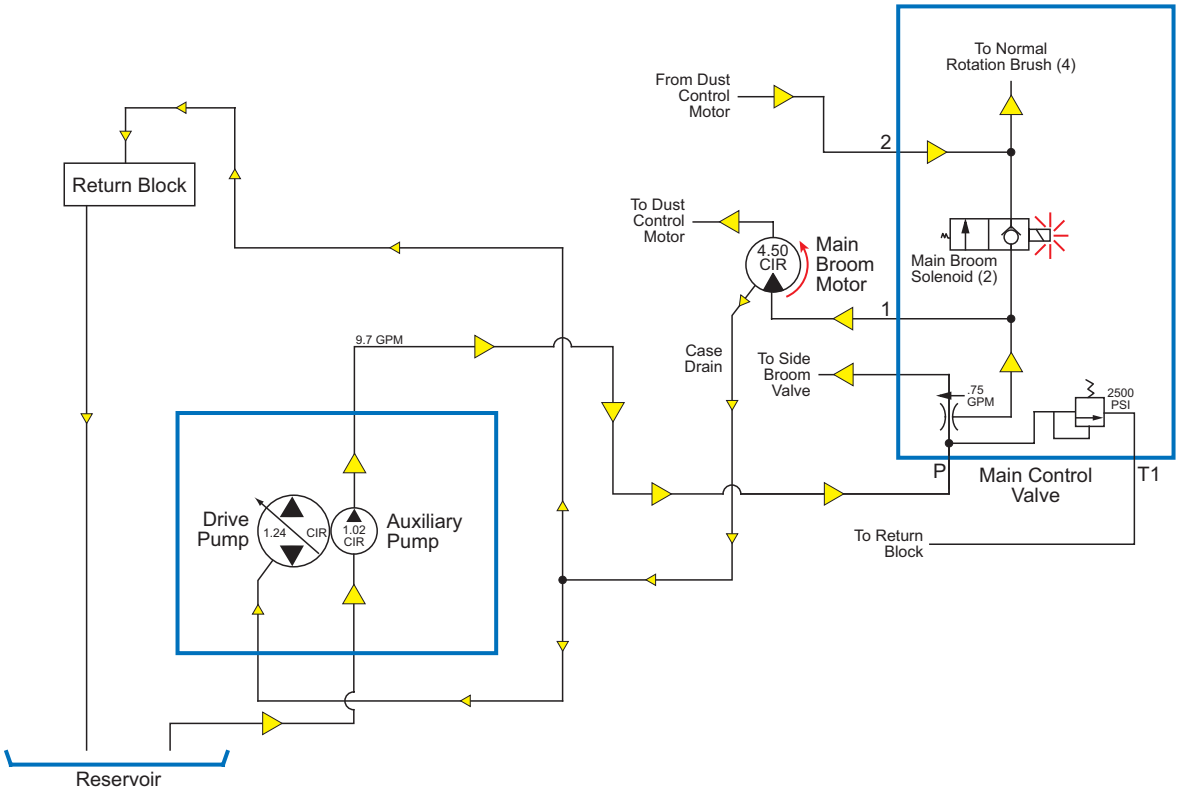

When the **Main Broom Motor** is on, the **Main Broom Solenoid (2)** is energized (closed). This forces the hydraulic oil to flow from the **Auxiliary Pump** through non-priority leg of the priority flow divider, then to the **Main Broom Motor** and **Dust Control Motor**. The oil will then flow from the discharge side of the **Dust Control Motor** to port "**2**" on the **Main Control Valve**.

The **Case Drain** from the **Main Broom Motor** goes to the **Return Block**.

Component Locations

The following components are included in this section:

- Main Broom, Broom Drive Arm and Hydraulic Broom Drive Motor.
- Main Broom Lift Linkage
- Main Control Valve

The **Main Broom** is located inside the broom chamber. The **Hydraulic Broom Drive Motor** is mounted on the **Broom Drive Arm**.

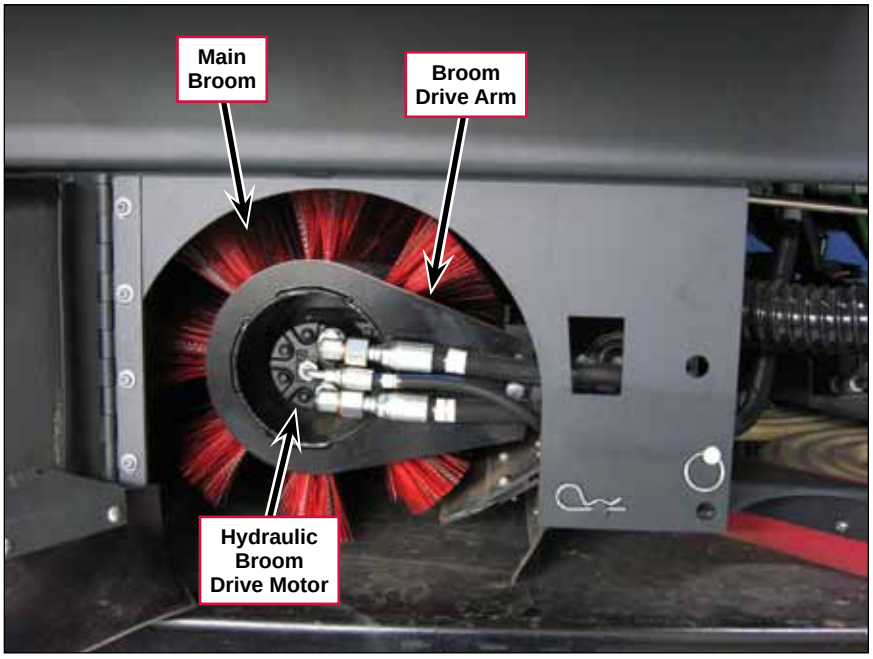

The upper portion of the main broom linkage consists of the **Main Broom Lift Control Lever**, **Adjusting Rod** and **Crank**. Moving the **Main Broom Lift Control Lever** moves the **Adjusting Rod** that pivots the **Crank**.

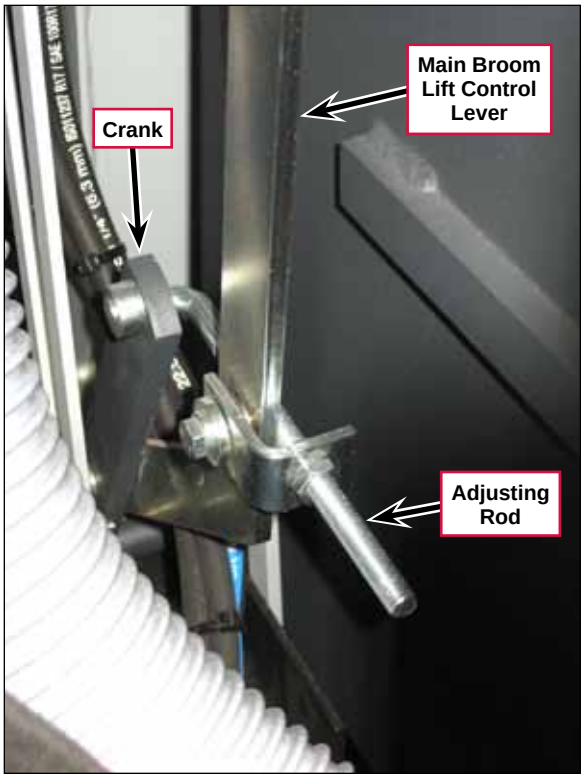

The lower portion of the main broom linkage consists of the **Crank** and **Broom Lift Link**. As the **Crank** pivots, it moves the **Broom Lift Link** up and down to raise and lower the main broom.

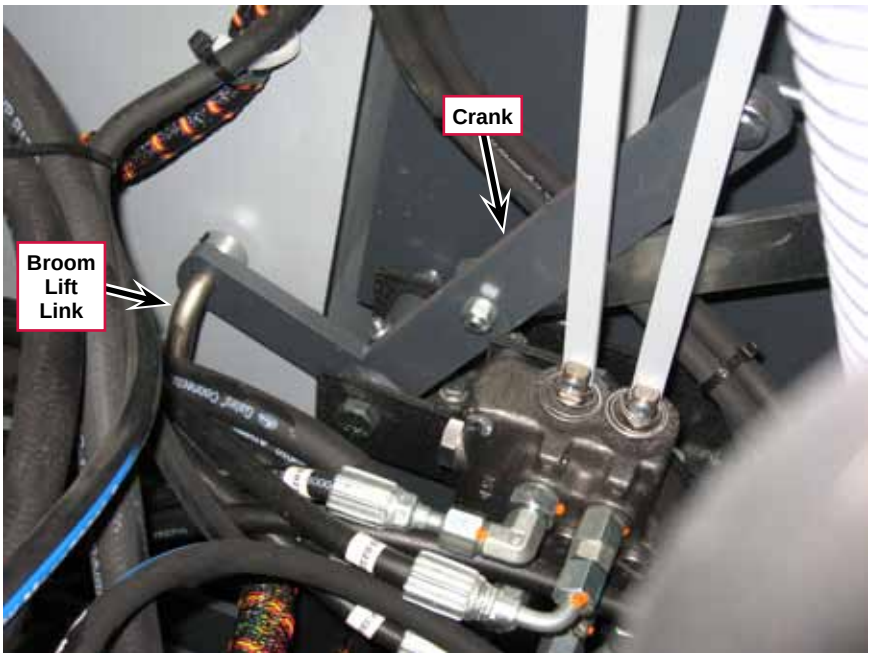

The **Main Broom Solenoid (2)** valve is part of the **Main Control Valve** and controls the oil flow to the main broom motor. The **Main Control Valve** is mounted on the underside of the machine, in front of and to the left of the scrub deck.

When the **Main Broom Solenoid (2)** valve is energized it closes to direct the oil flow through **Port 1** on the **Main Control Valve**. The oil is directed through the main broom motor and dust control motor, then returns to **Port 2** on the **Main Control Valve**.

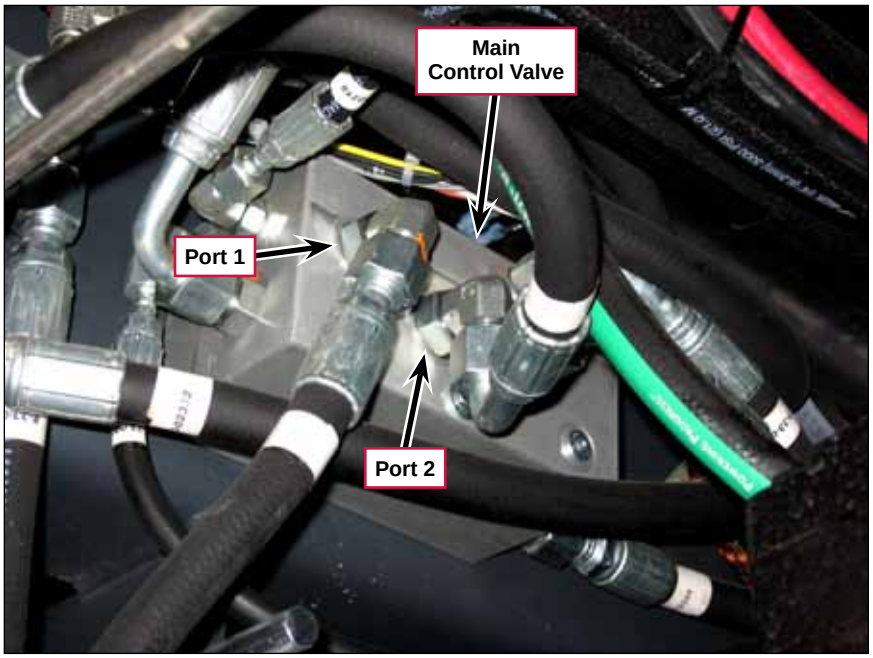

Main Control Valve
(bottom view - shown mounted in assembled machine)

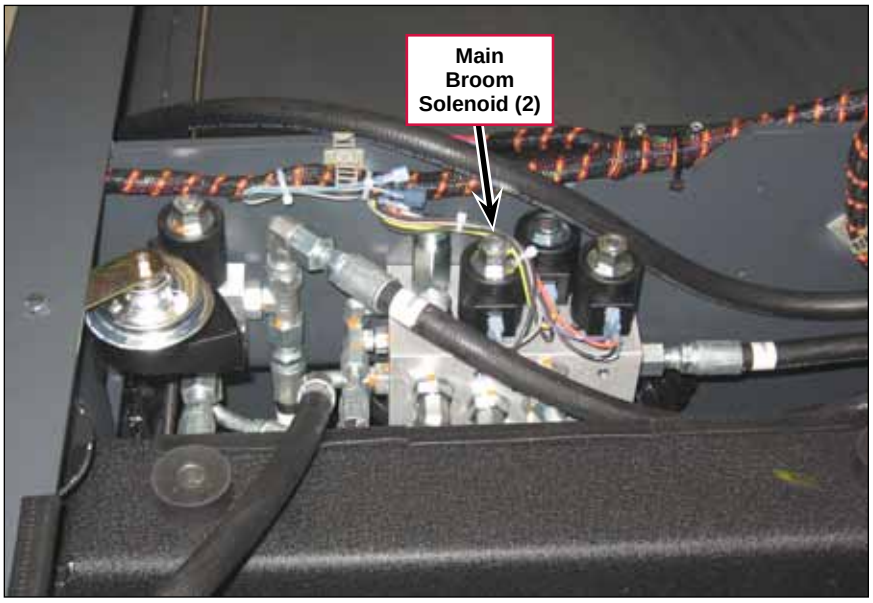

Main Control Valve
(top view - shown while machine is being assembled)

Maintenance and Adjustments

Warning! ***Before performing any machine maintenance or adjustments, make sure the key switch is off, the key is removed from the machine and the parking brake is engaged.***

To Adjust the Main Broom Height

1. Loosen one of the **Jam Nuts** holding the **Adjusting Rod** in position on the **Broom Lever Bracket**.
2. Adjust the position of the **Jam Nuts** on the **Adjusting Rod** to raise or lower the main broom height as necessary.
3. When the main broom height is correct, tighten the two **Jam Nuts**.

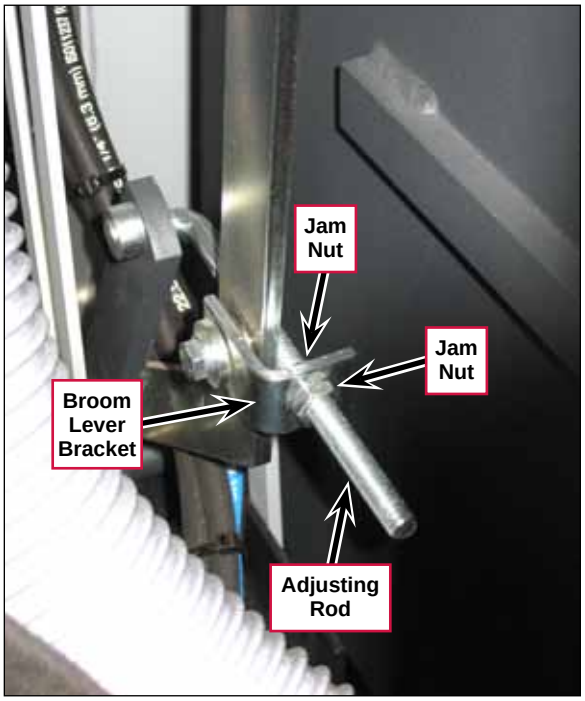

Troubleshooting

Problem	Cause	Correction
Main broom motor not running.	Circuit breaker CB6 is tripped.	Reset the circuit breaker.
	No voltage to the Main Broom Solenoid (2) valve.	• Check for continuity through the hopper and hopper door “whisker” switches when the hopper is down and the hopper door is closed. Repair the wiring or replace the switch(es) as necessary. • Check the Main Broom Switch function and repair/ replace as necessary. • Check the wiring from the Main Broom Switch to the Main Broom Solenoid (2) valve. There should be 0 volts to the solenoid when the main broom and dust control motors are off, and 12 VDC to the solenoid when the motors are on.
	Main Broom Solenoid (2) valve not operating correctly.	1. Check the solenoid coil resistance. If not 7.2 ohms ±10%, replace the coil. Also see the ***Main Broom Sweep System Wiring Diagram***. 2. If the coil resistance is within spec, check for binding or a mechanical problem. Repair or replace the solenoid valve as necessary.

Specifications

Component	Specifications
Hydraulic Broom Drive Motor	Displacement – 4.5 CIR
Main Broom Solenoid (2) Valve	Voltage – 12 volts
	Nominal Coil Resistance – 7.2 Ohms
	Initial current draw – 1.67 amps

Sweep System, Side Broom

Functional Description

Overview

The side broom sweep system includes the **Side Broom**, **Hydraulic Side Broom Motor**, **Side Broom Arm Weldment** and **Cable**, and the side broom solenoid valve.

One of the 1.02 CIR auxiliary pumps powers the **Hydraulic Side Broom Motor**. The Side Broom Switch on the instrument panel switches the side broom on and off.

The Operator manually raises and lowers the **Side Broom** with the **Lift Knob** and **Cable** connected to the pivoting **Side Broom Arm Weldment**.

The side broom sweep system is standard on variable dump models, and is available as an option on manual dump models.

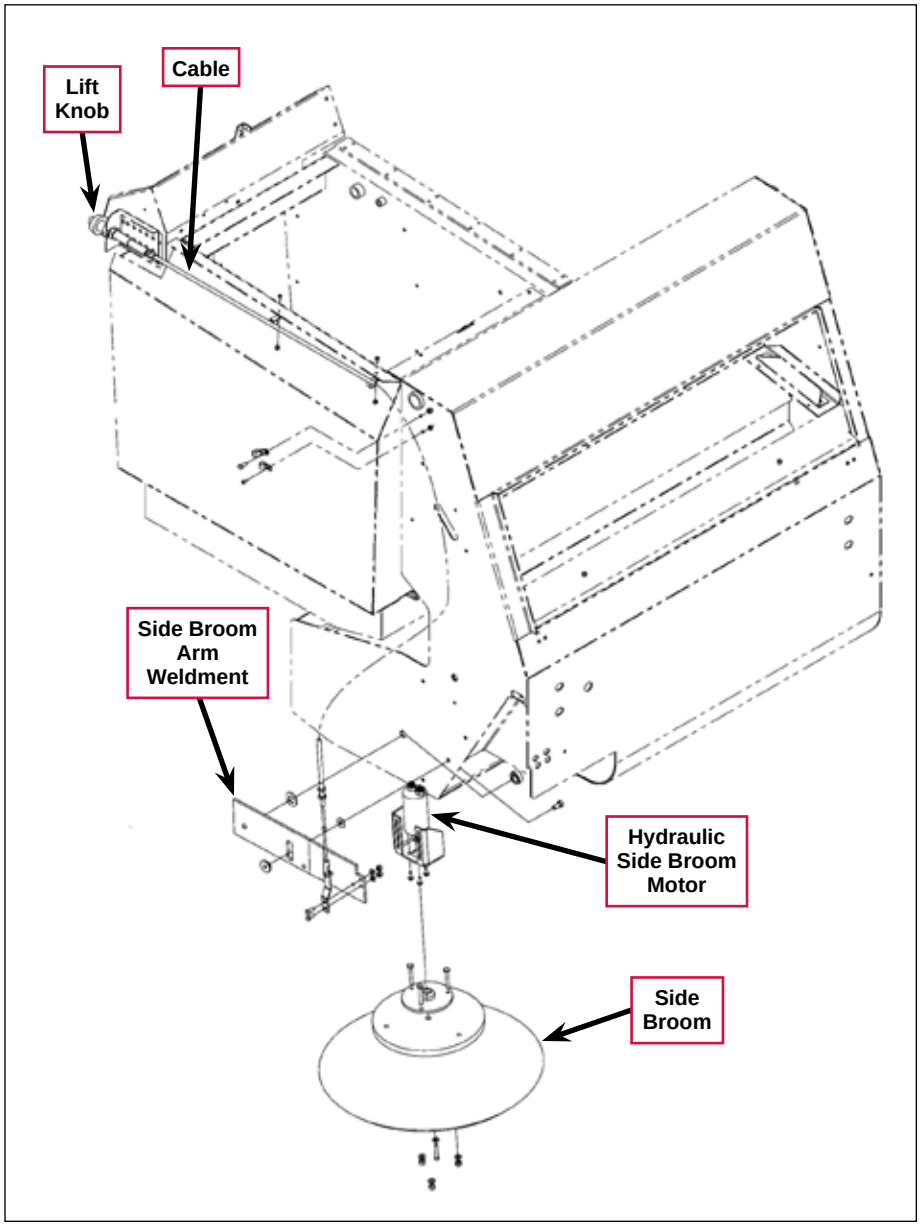

The **Side Broom Valve** controls the oil flow to the hydraulic side broom motor.

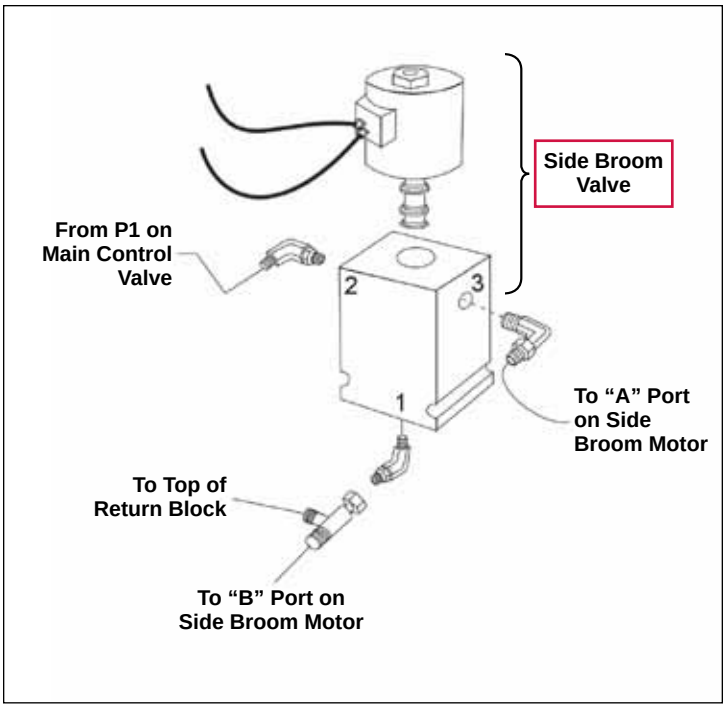

Side Broom Sweep System Wiring Diagram

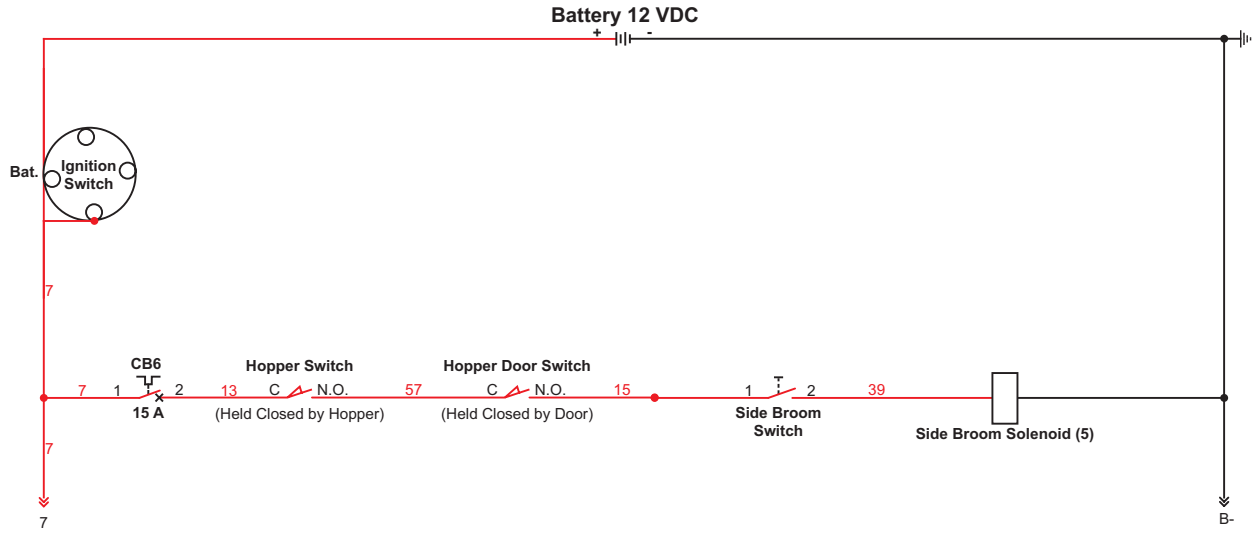

Circuit Description

The **Side Broom Solenoid (5)** and valve control the oil flow to the side broom motor. The side broom motor will run when the **Ignition Switch** is on and the **Side Broom Switch** on the instrument panel is switched on.

Note that the **Hopper Switch** and the **Hopper Door Switch** must both be closed for the side broom motor to operate.

Also refer to the ***Side Broom Sweep System Hydraulic Diagrams*** section.

Side Broom Sweep System Hydraulic Diagrams

Side Broom Motor Off

When the **Side Broom Motor** is off, the **Side Broom Valve** solenoid is de-energized (open). This allows the hydraulic oil to flow from the **Auxiliary Pump** through priority leg of the priority flow divider, then through the **Side Broom Valve**. The oil will then flow to the **Return Block** and **Filter**, then to the **Reservoir**.

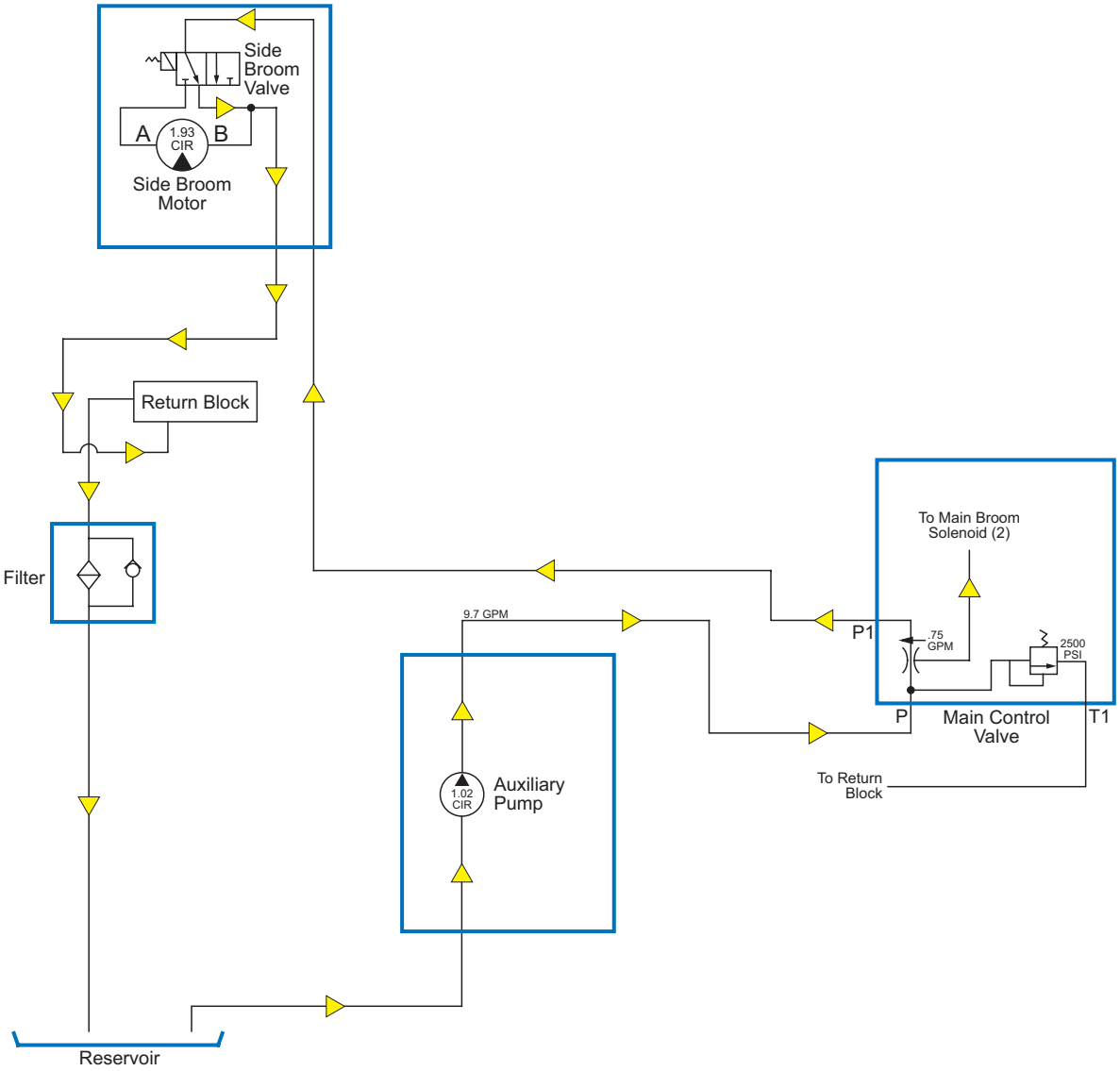

Side Broom Motor On

When the **Side Broom Motor** is on, the **Side Broom Valve** solenoid is energized. This forces the hydraulic oil to flow from the **Auxiliary Pump** through priority leg of the priority flow divider, then through the **Side Broom Valve** and **Side Broom Motor**. The oil will then flow from the discharge side of the **Side Broom Motor** to the **Return Block** and **Filter**, then to the **Reservoir**.

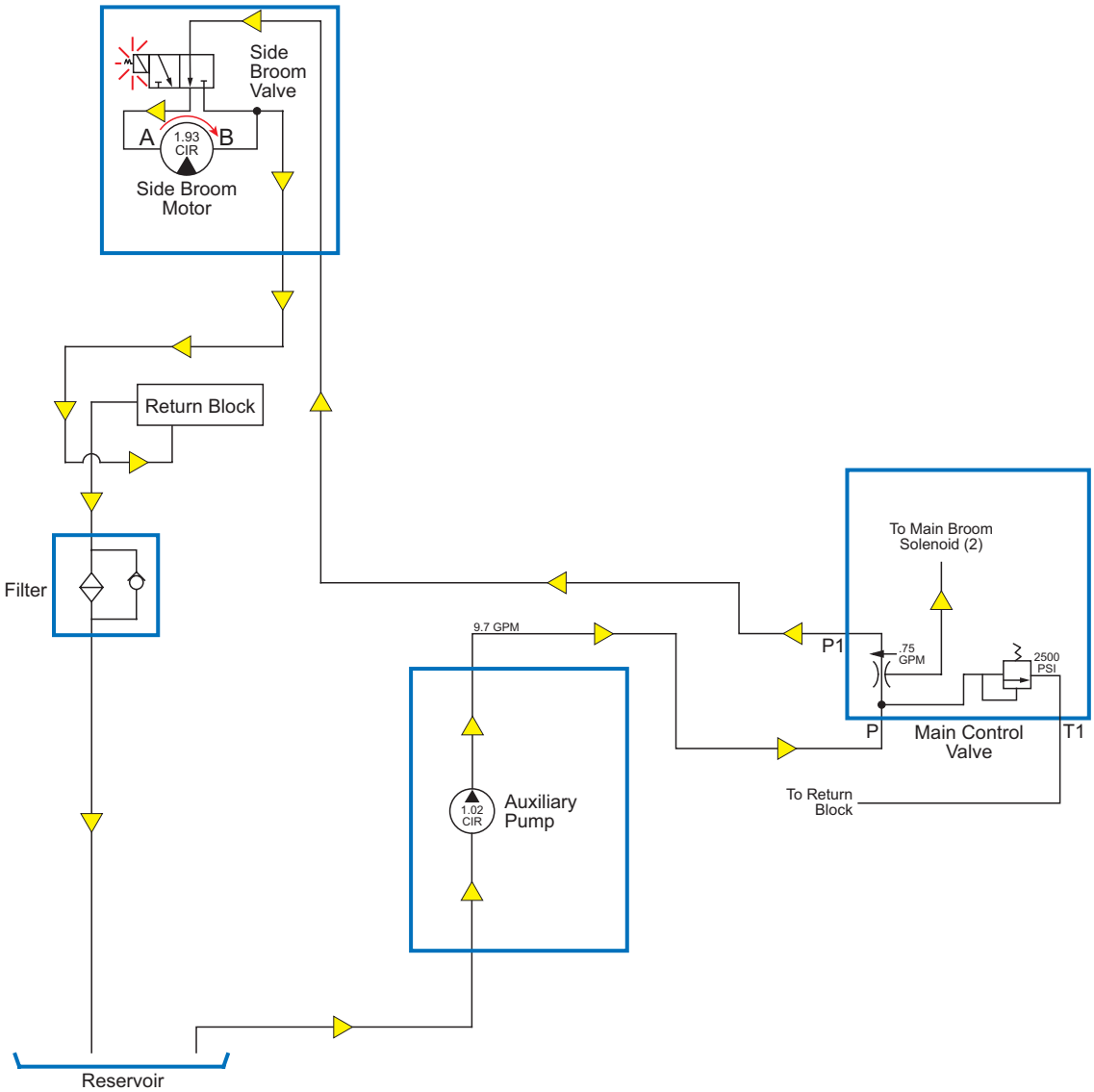

Component Locations

The following components are included in this section:

- Side Broom, Side Broom Motor and Side Broom Arm Weldment
- Side Broom Valve

The **Side Broom** and **Side Broom Motor** are mounted on the **Side Broom Arm Weldment**. The **Side Broom Arm Weldment** is attached to the machine frame and pivots up and down to raise and lower the **Side Broom**.

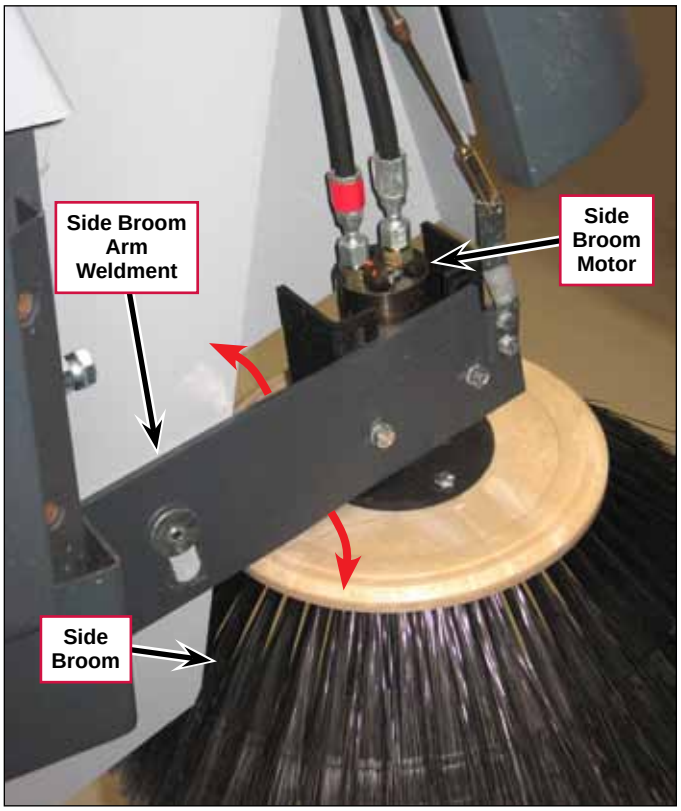

The **Side Broom Valve** is mounted below the floor of the Operator compartment and to the right of the **Cylinder Control Valve**.

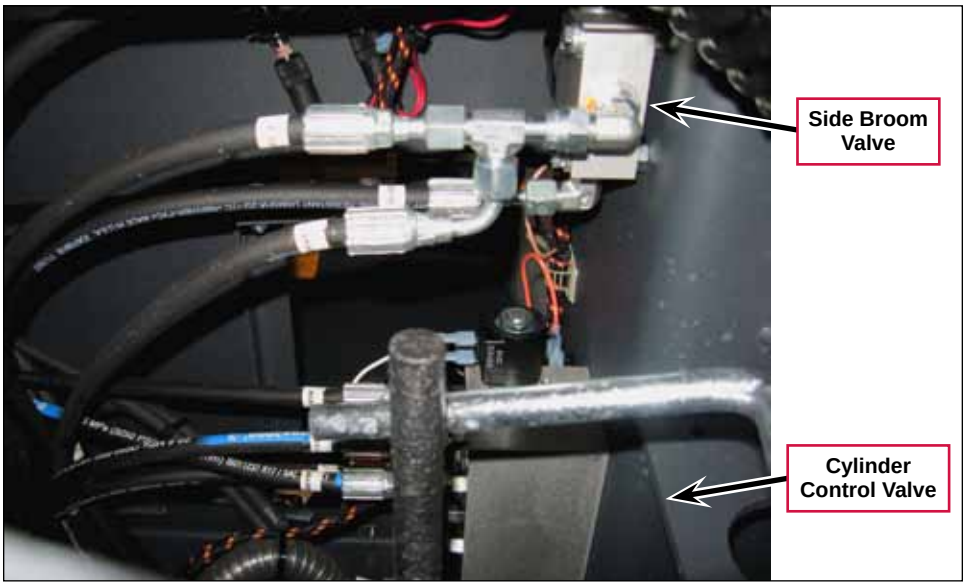

Maintenance and Adjustments

Warning! ***Before performing any machine maintenance or adjustments, make sure the key switch is off, the key is removed from the machine and the parking brake is engaged.***

To Adjust the Side Broom Height

1. Remove the **Cotter Pin** from the **Pin**.
2. Remove the **Pin** holding the **Clevis** to the **Strap**.
3. Loosen the **Locking Nut** and rotate the **Clevis** as necessary to raise or lower the side broom height.
4. Once the side broom height is correct, reinstall the **Pin** into the **Clevis** and **Strap**.
5. Install a new **Cotter Pin** into the **Pin**.
6. Make sure the **Clevis** and **Strap** move freely with no binding, then tighten the **Locking Nut**.

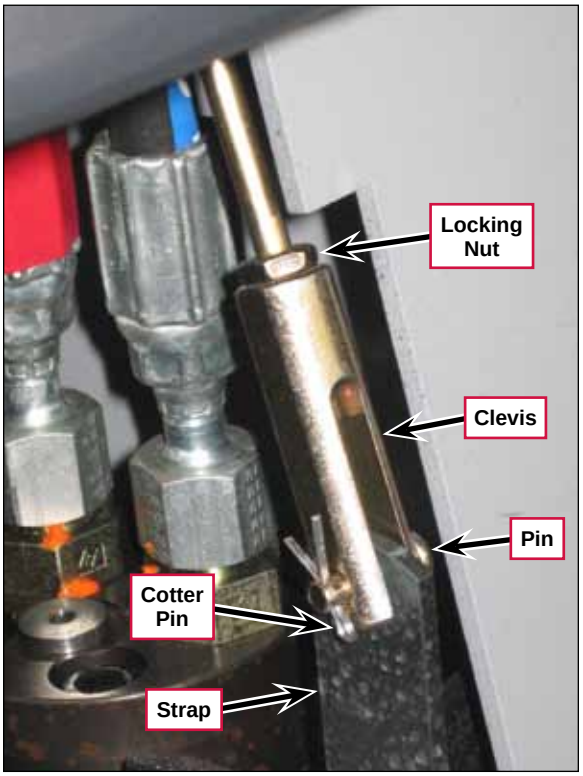

Troubleshooting

General Troubleshooting

Problem	Cause	Correction
Side Broom motor not running.	Circuit breaker CB6 is tripped.	Reset the circuit breaker.
	No voltage to the Side Broom Solenoid (5).	• Check for continuity through the hopper and hopper door “whisker” switches when the hopper is down and the hopper door is closed. Repair the wiring or replace the switch(es) as necessary. • Check the Side Broom Switch function and repair/ replace as necessary. • Check the wiring from the Side Broom Switch to the Side Broom Solenoid (5). There should be 0 volts to the solenoid when the Side Broom Switch is off, and 12 VDC to the solenoid when the Side Broom Switch is on.
	Side Broom Solenoid (5) is not operating.	1. Check the coil resistance of the Side Broom Solenoid (5). If not 10.1 ohms ±10%, replace the coil. 2. If the coil resistance is within spec, check for binding or a mechanical problem. Repair or replace the valve as necessary.

Specifications

Component	Specifications
Side Broom Solenoid (5) Valve	Nominal Coil Resistance – 10.1 ohms
Side Broom Motor	Displacement – 1.93 CIR

Wheel System, Non-traction

Functional Description

The non-traction wheel system supports the front of the machine and includes the braking system.

Five **1/2”-20 x 1.56 Studs** and **1/2”-20 Lug Nuts** fasten the **Molded Wheels** to the **Front Wheel Hubs**. Five 1/4”-20 screws fasten the **Brake Discs** to the **Front Wheel Hubs**.

A **Slotted Hex Nut** and cotter pin hold the **Front Wheel Hubs** and attached **Molded Wheels** and **Brake Discs**, and the associated roller bearings and washers onto the **Stub Axle Weldments**.

The brake rods actuate the **Brake Caliper Assembly Weldments** which compress the brake pads against the **Brake Discs** to stop the machine. Four **1/2”-20 x 1.0 HHC Screws** fasten the **Stub Axle Weldments** to the machine frame.

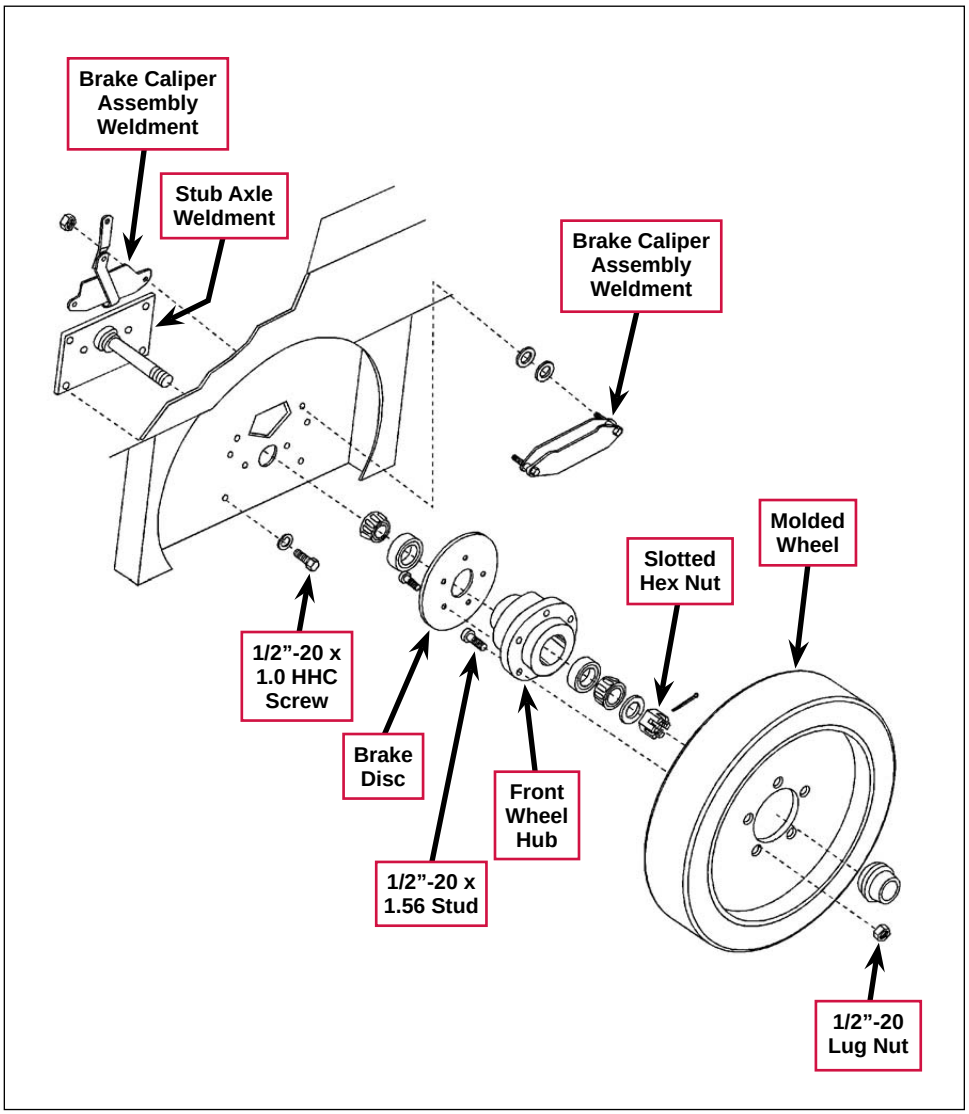

When the **Brake Pedal** is depressed it pivots the **Cross Shaft** which pulls the two **Brake Rods** toward the rear. **The Brake Pedal Clevises** on the **Brake Rods** are connected to the brake caliper assembly weldments on the frame. When the **Brake Pedal** pivots the **Cross Shaft**, the **Brake Rods** actuate the brake caliper assembly weldments to apply the machine brakes.

When the **Parking Brake Lever** is lifted it pulls on the **Parking Brake Cable**. The **Parking Brake Cable** pivots the **Cross Shaft** to hold the machine brakes in the applied position.

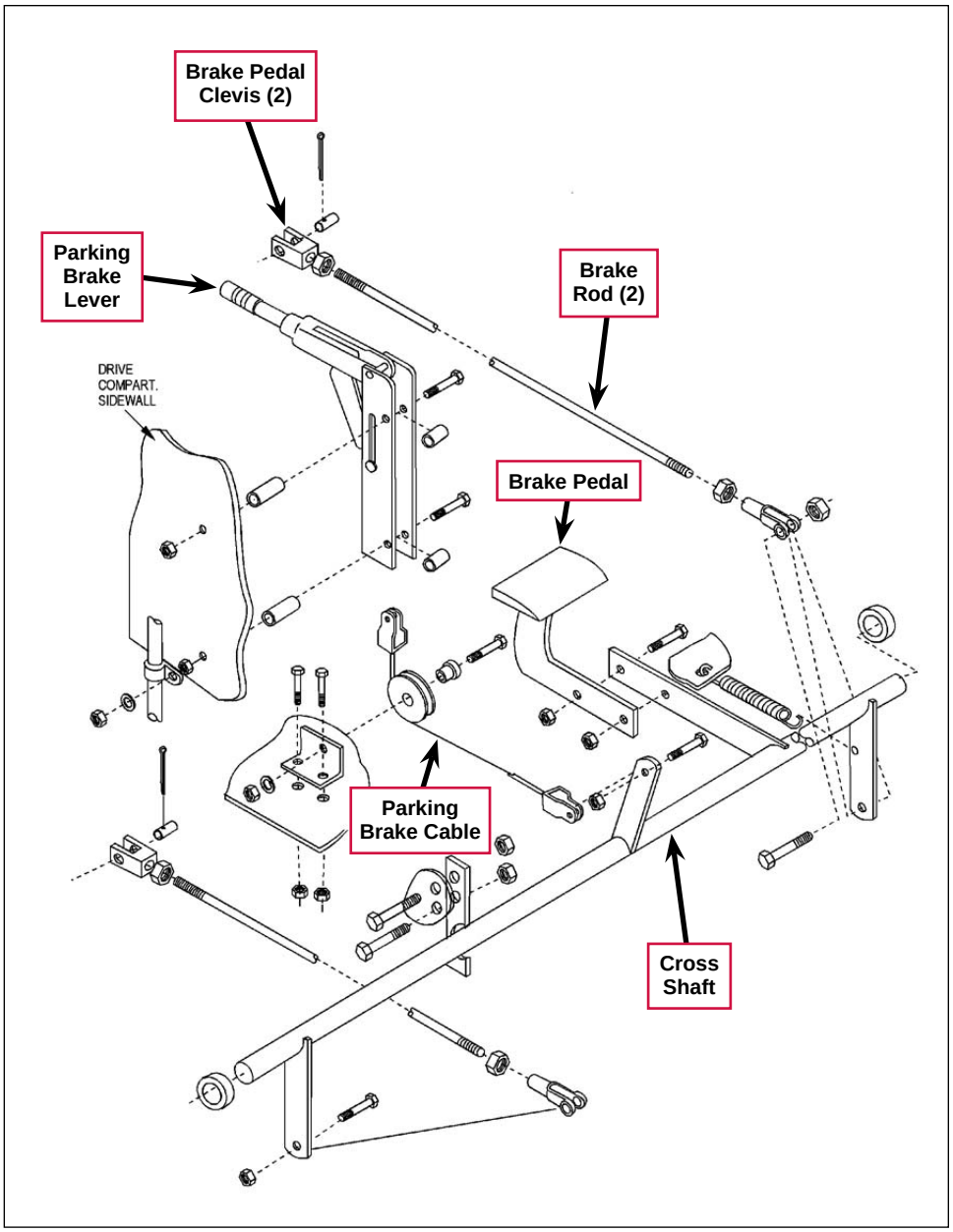

Maintenance and Adjustments

Warning! Before performing any machine maintenance or adjustments, make sure the key switch is off and the key is removed from the machine.

Service Brake Adjustment

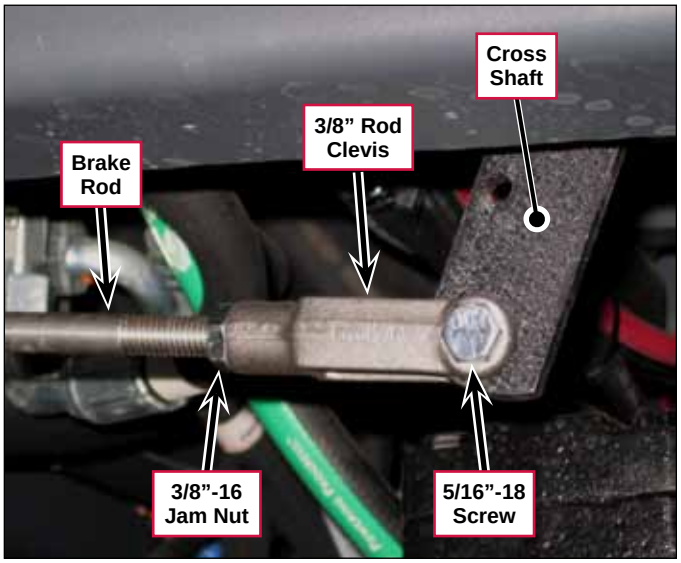

1. Open the broom chamber doors to access the **Brake Rod** linkage connected to the **Cross Shaft**.
2. Loosen the **3/8"-16 Jam Nut**.
3. Remove the nut and **5/16"-18 Screw** holding the **3/8" Rod Clevis** to the **Cross Shaft**.
4. Rotate the **3/8" Rod Clevis** to adjust the brake tension on the corresponding wheel as necessary.
5. Reinstall the **5/16"-18 Screw** and nut.
6. Make sure the **3/8" Rod Clevis** is aligned with the **Cross Shaft**, then tighten the **3/8"-16 Jam Nut**.
7. Close and latch the broom chamber door.
8. Repeat steps 1 through 7 above for the other front wheel brake. Note that the brakes on both front wheels should be adjusted equally.

Parking Brake Adjustment

To adjust the parking brake, rotate the **Adjustment Knob** on the end of the **Parking Brake Lever**.

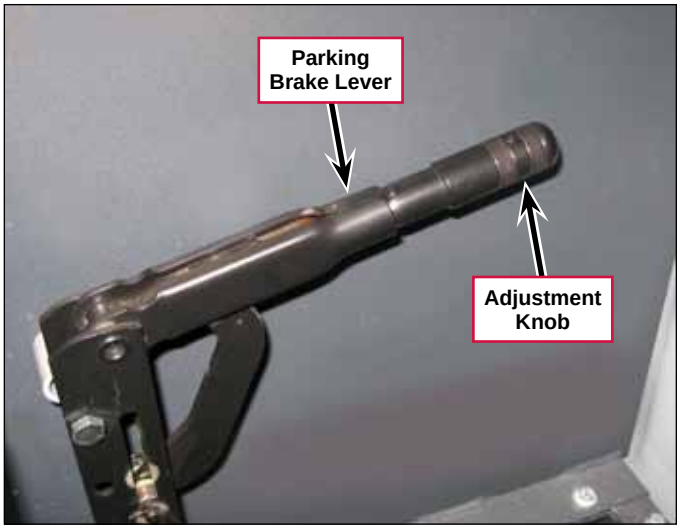

Troubleshooting

Problem	Cause	Correction
The wheels are making excessive noise.	The wheel bearings are worn.	Check the wheel bearings and replace as required.
	The wheel and/or stub axle weldment are damaged.	Check the wheel and stub axle weldment and replace as required.
The brakes are not working correctly.	The brakes are out of adjustment.	Adjust the brake tension.
	The brake linings are worn out,	Replace the brake linings.

Specifications

Component	Specifications
Brakes (service)	Mechanical disc brakes, one on each front wheel, cable actuated
Wheel (front) load bearing	Size 16 in x 3.5 in [406 mm x 89 mm]
Tire	Rubber – 77 ±5 Shore A Nitrile compound, black

Wheel System, Traction

Functional Description

Overview

The traction wheel system includes the hydraulic drive wheel motor and drive pump, and the foot pedal and associated components that control the direction and speed of the drive wheel motor.

The drive wheel motor is driven by the variable-displacement drive pump which allows speed and directional control. The drive pump and drive wheel motor hydraulic system is a closed system, but allows for programmed oil leakage through the drive pump for lubrication and cooling purposes. This leaked oil returns to the reservoir and requires make-up oil that is supplied to the drive pump through the charge circuit.

Drive Pump

The **Drive Pump** is driven by the engine and powers the hydraulic drive wheel motor. Note that the **Drive Pump** was changed in early 2010, beginning with machine serial number 1000034942, from part number 7-60-05026 to part number 56514943. This change also included changes to the forward/reverse controls.

Drive Pump Before Machine Serial Number 1000034942

The **Drive Pump** on machines before serial number 1000034942 is part number 7-60-05026.

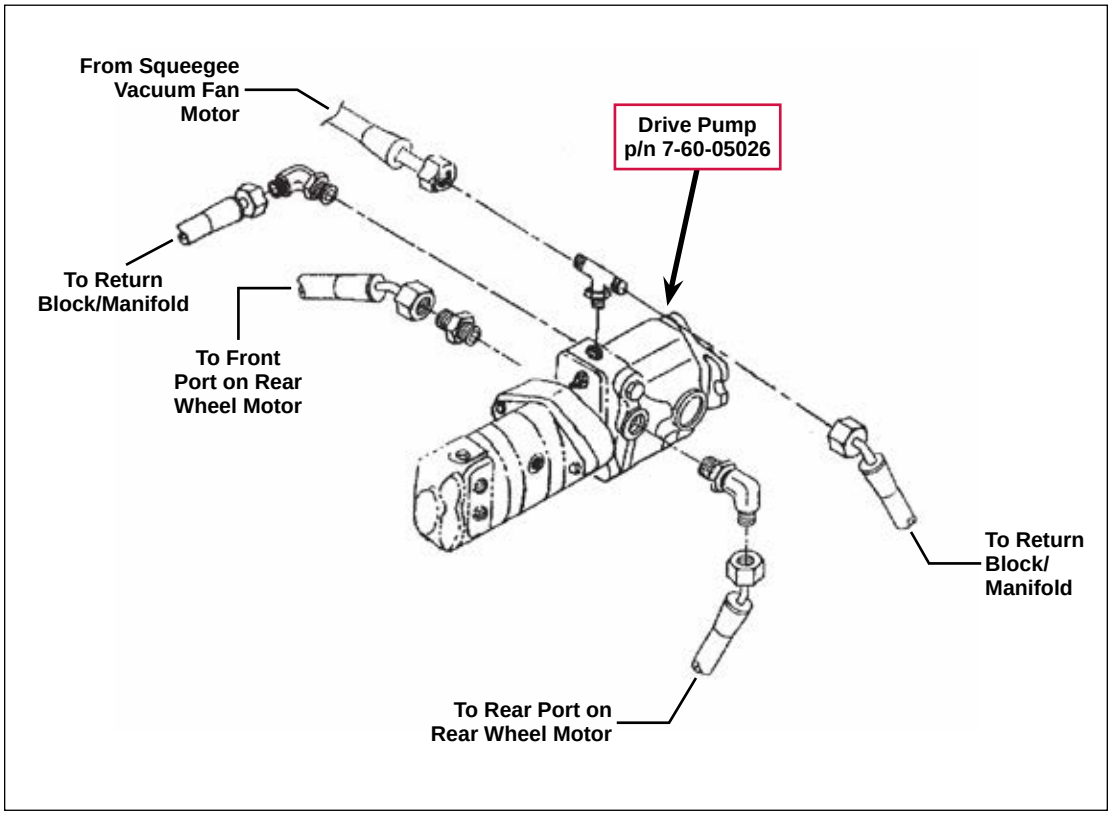

Drive Pump After Machine Serial Number 1000034942

The **Drive Pump** on machines after serial number 1000034942 is part number 56514943.

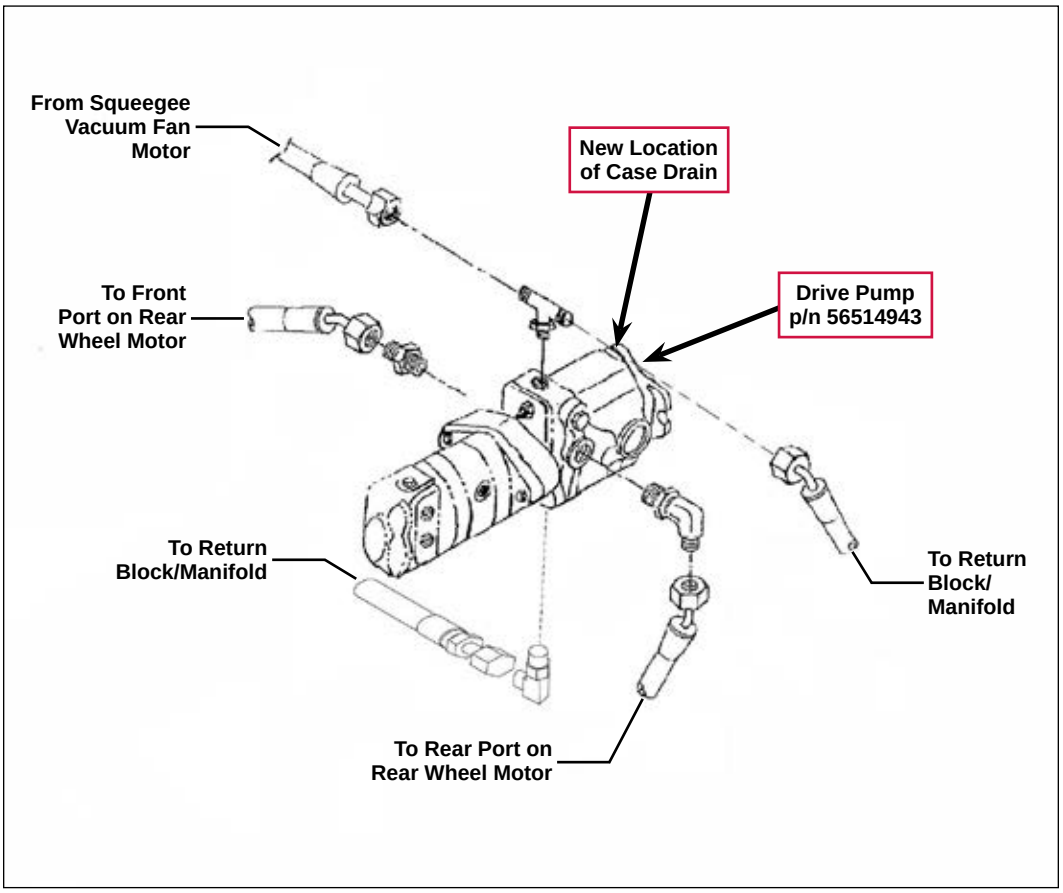

Forward/Reverse Controls

The forward/reverse controls connect the foot (drive) pedal to the swash plate linkage on the drive pump. Pressing the foot pedal changes the angle of the swash plate inside the drive pump.

- The direction in which the swash plate is moved determines which port on the drive motor receives the hydraulic oil. This determines the machine direction.
- The distance to which the swash plate is moved determines the volume of hydraulic oil to the drive motor. This determines the machine speed.

Note that the forward/reverse controls for the GM and Mitsubishi engines are different. The forward/reverse controls also vary depending on which model drive pump is installed (part number 7-60-05026 before serial number 1000034942, or part number 56514943 after serial number 1000034942).

Forward/Reverse Controls – GM Engines Before s/n 1000034942

The foot pedal actuates the **Forward/Reverse Cable** which rotates the **Hydrostat Arm Plate**. The **Hydrostat Arm Plate** is fastened to the **Transmission Arm** which pivots the swash plate inside of the **Drive Pump** to control the machine direction and speed.

The **Centering Control** returns the foot pedal, **Forward/ Reverse Cable**, **Hydrostat Arm Plate** and **Transmission Arm** to the neutral position when the foot pedal is released.

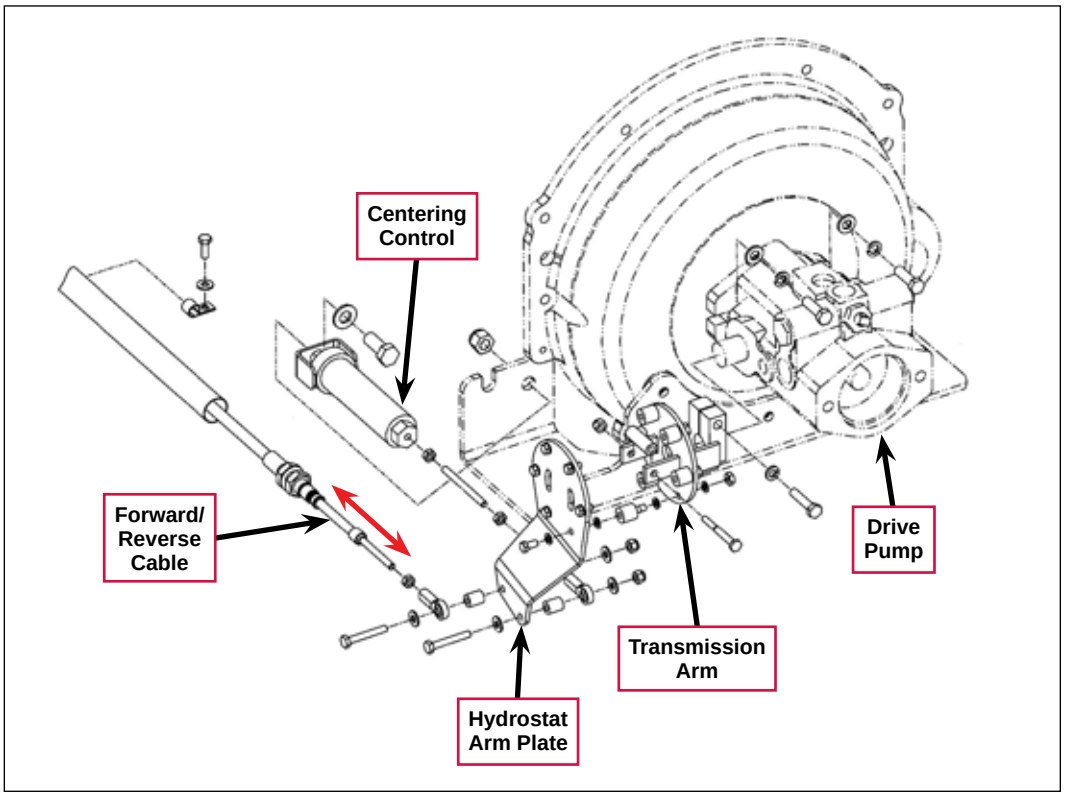

Forward/Reverse Controls – GM Engines After s/n 1000034942

The foot pedal actuates the **Forward/ Reverse Cable** which connects to the **Hydroback**. The **Hydroback** transfers the **Forward/Reverse Cable** motion to the **Pintle Arm Weldment** which pivots the swash plate inside of the **Drive Pump** to control the machine direction and speed.

The **Hydroback** returns the foot pedal, **Forward/ Reverse Cable** and **Pintle Arm Weldment** to the neutral position when the foot pedal is released.

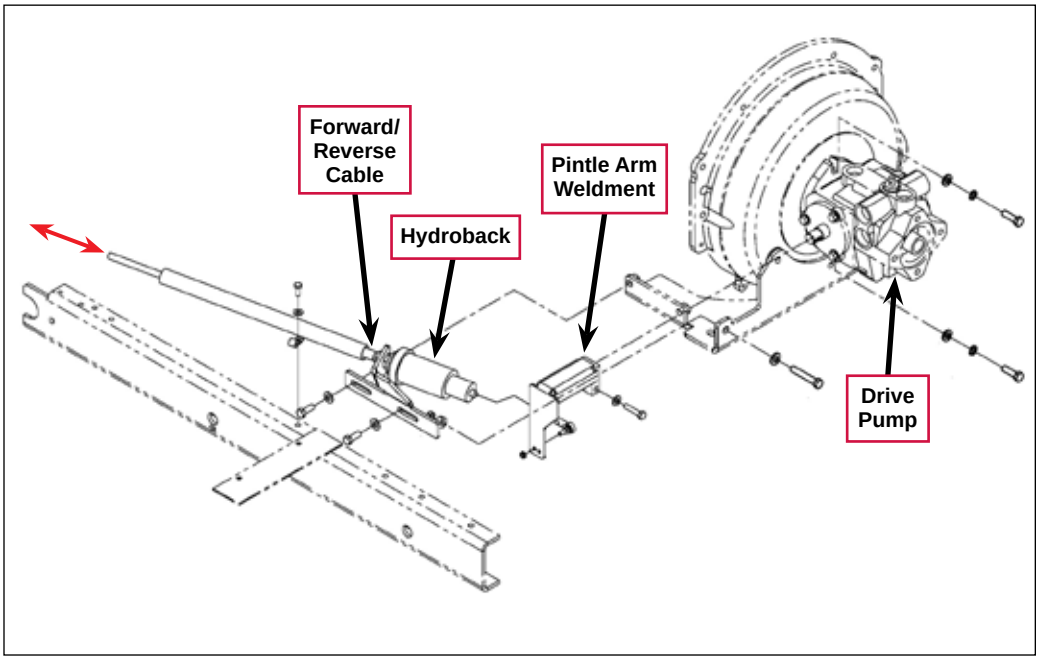

Foot Pedal Assembly – GM Engines

The **Foot Pedal** pivots on the **Foot Pedal Mount Brackets** to move the **Forward/Reverse Cable** forward and backward. The **Forward/Reverse Cable** actuates the forward/reverse controls connected to the drive pump.

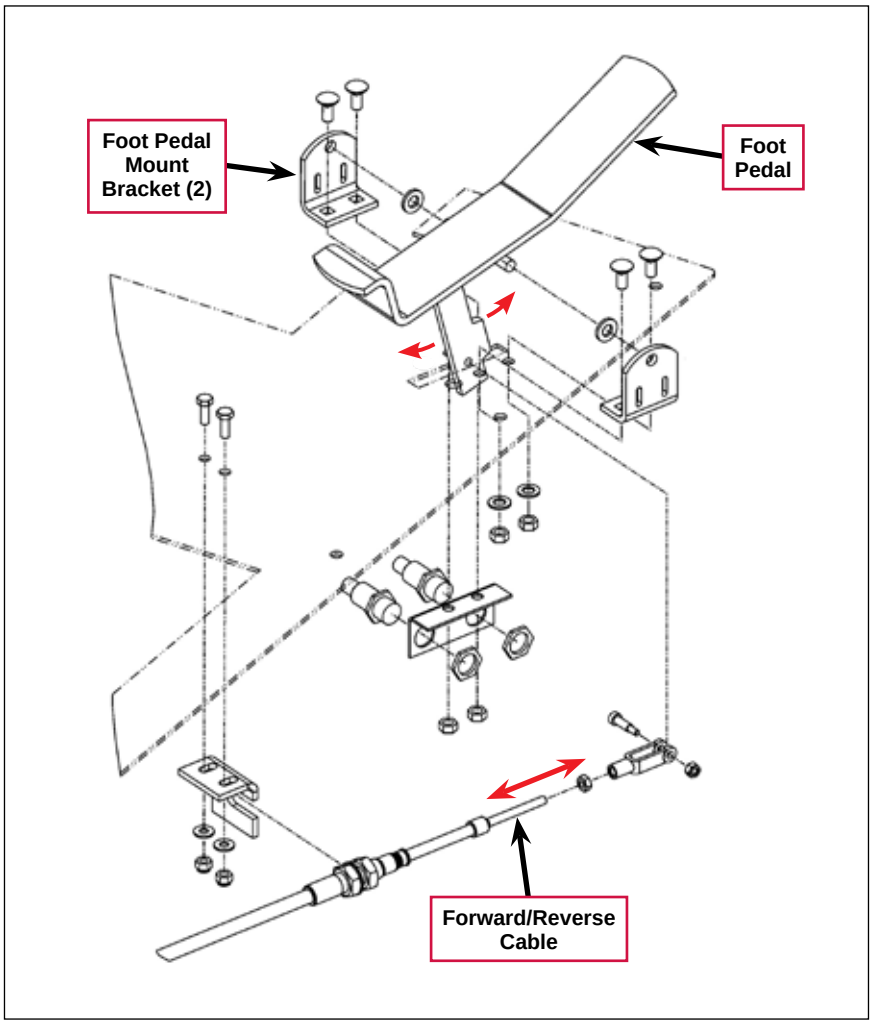

Forward/Reverse Controls – Mitsubishi Diesel Engines Before s/n 1000034942

The **Foot Pedal** actuates the **Forward/Reverse Cable** which rotates the **Shift Arm** and attached **Transmission Arm Plate** and **Transmission Arm Weldment**. The **Transmission Arm Weldment** pivots the swash plate inside of the **Drive Pump** to control the machine direction and speed.

The **Centering Control** returns the **Foot Pedal**, **Forward/Reverse Cable**, **Shift Arm**, **Transmission Arm Plate** and **Transmission Arm Weldment** to the neutral position when the **Foot Pedal** is released.

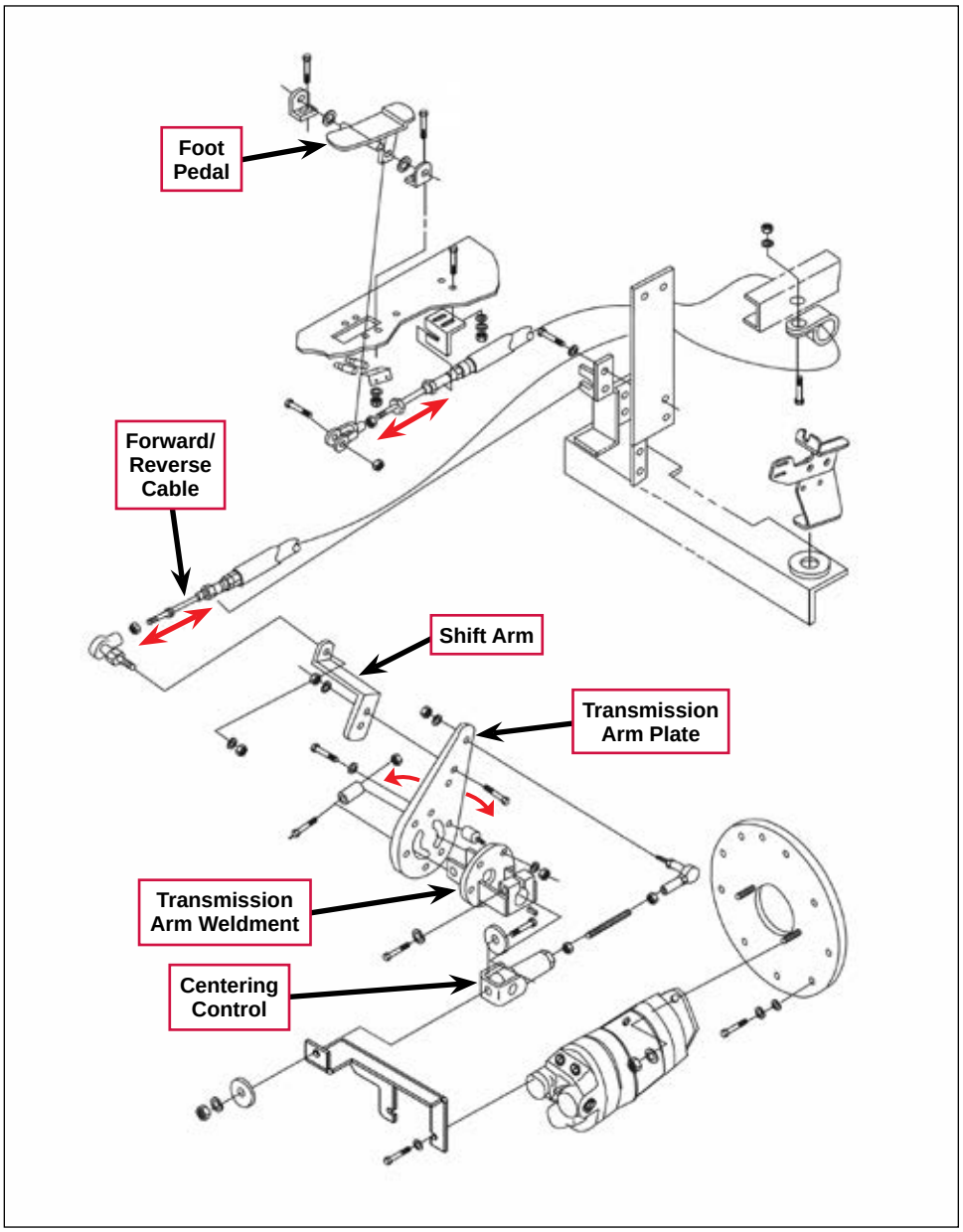

Forward/Reverse Controls – Mitsubishi Diesel Engines After s/n 1000034942

The **Foot Pedal** actuates the **Forward/Reverse Cable** which connects to the **Hydroback**. The **Hydroback** transfers the **Forward/ Reverse Cable** motion to the **Pintle Arm Weldment** which pivots the swash plate inside of the **Drive Pump** to control the machine direction and speed.

The **Hydroback** returns the **Foot Pedal**, **Forward/Reverse Cable** and **Pintle Arm Weldment** to the neutral position when the **Foot Pedal** is released.

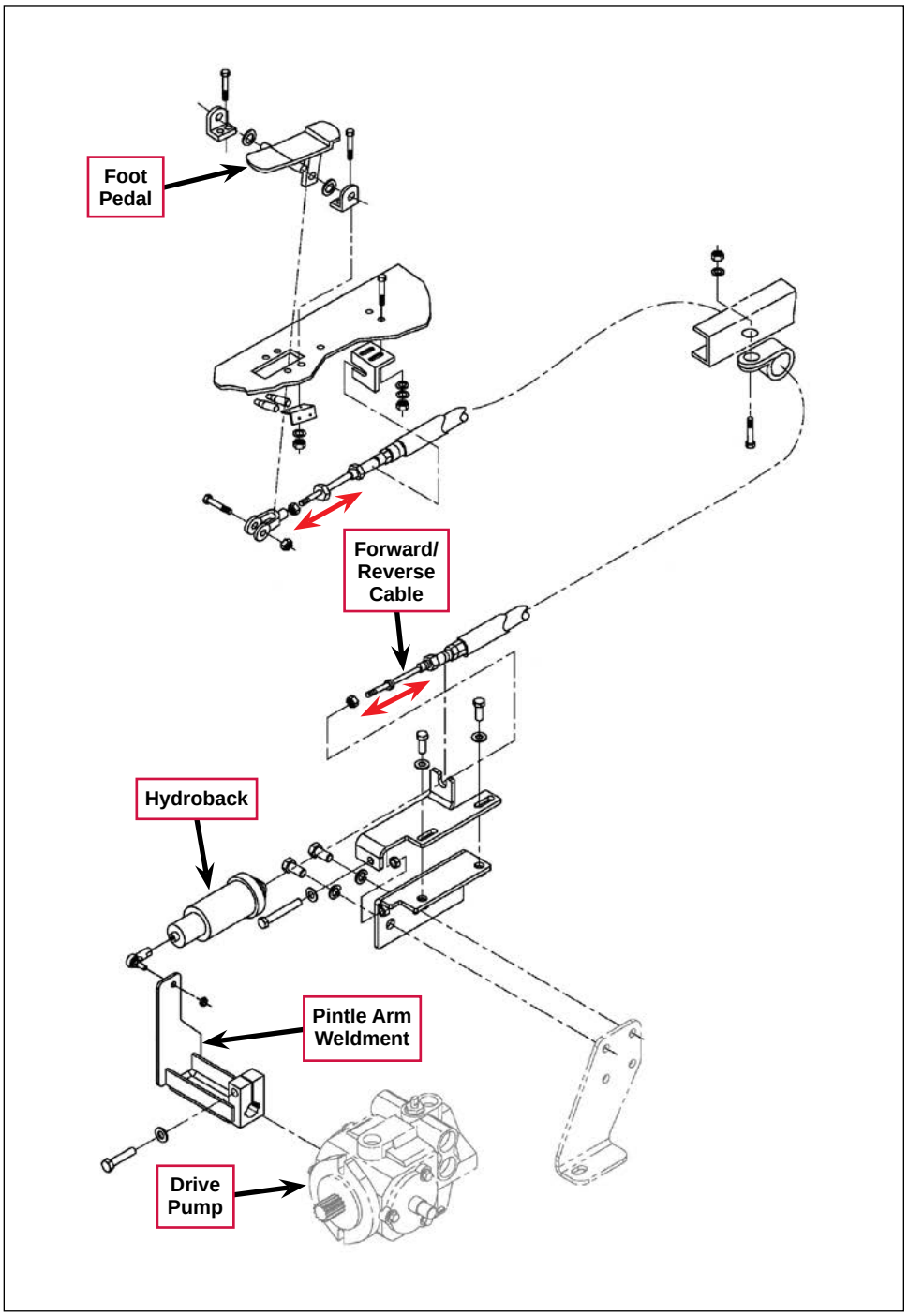

Rear Wheel and Rear Wheel Motor

The **Rear Wheel** (tire and outer rim) is bolted to the **Drive Wheel Hub**. The assembled **Rear Wheel** and **Drive Wheel Hub** fit onto the keyed, tapered shaft on the **Rear Wheel Motor**. A **Slotted Nut** and **Cotter Pin** hold the assembled **Rear Wheel** and **Drive Wheel Hub** onto the **Rear Wheel Motor** shaft. The **Rear Wheel Motor** is bolted to the **Rear Wheel Support**.

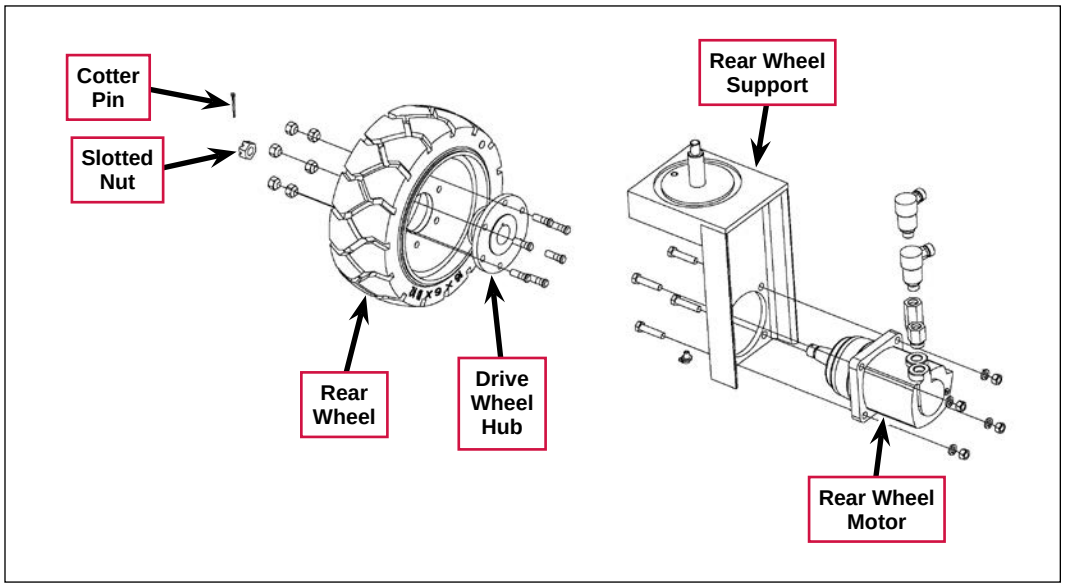

The standard **Rear Wheel Motor** is a 15.4 CIR hydraulic motor that drives the **Rear Wheel**.

The two top **Hydraulic Hoses** are connected to the drive pump. The bottom **Hydraulic Hose** is the **Case Drain** connected to the return block.

When the internal tow valve in the drive pump is actuated, it bypasses the hydraulic circuit from the drive pump to the **Rear Wheel Motor** to allow the **Rear Wheel** to rotate freely when towing or pushing the machine.

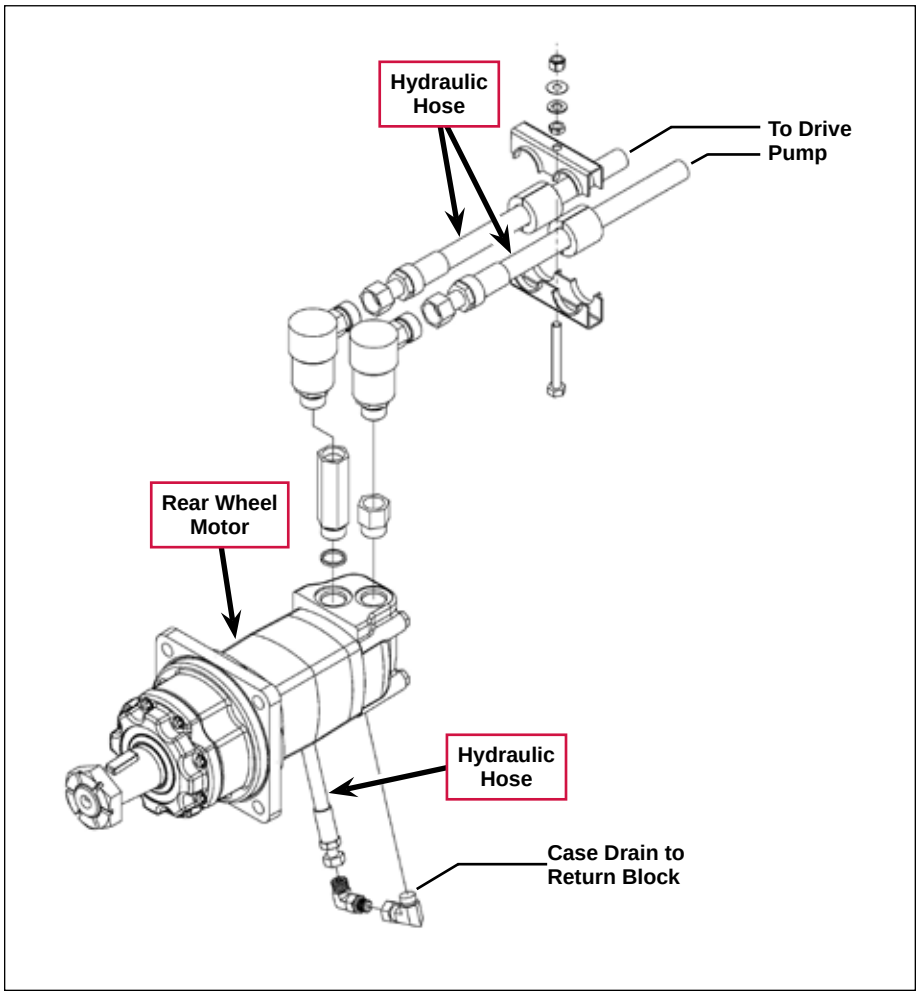

Electrical Schematic

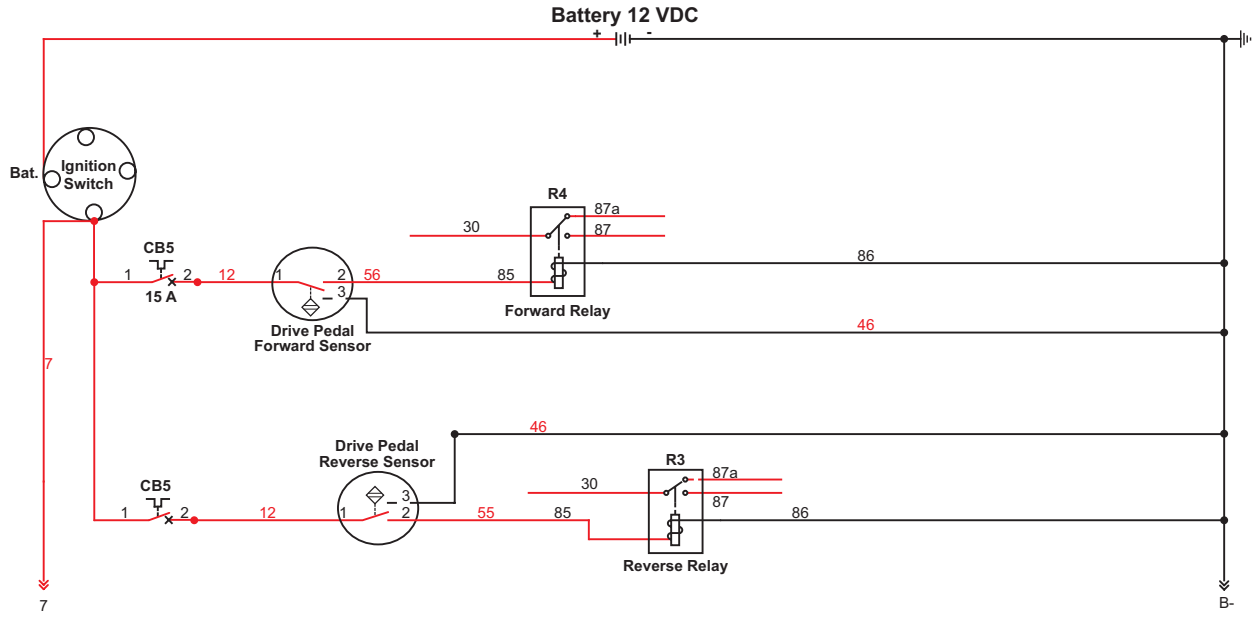

Electrical Circuit Description

The only electrical components associated with the traction wheel system are the **Drive Pedal Forward Sensor** and **Drive Pedal Reverse Sensor**. These sensors are proximity sensors that actuate the **Forward Relay** and **Reverse Relay** to enable and disable the machine functions that are related to the direction of machine travel.

Hydraulic Diagrams

Rear Wheel Motor in Neutral

When the foot pedal is in the neutral position with the engine running, the **Drive Pump** will not send any oil to the **Rear Wheel Motor**.

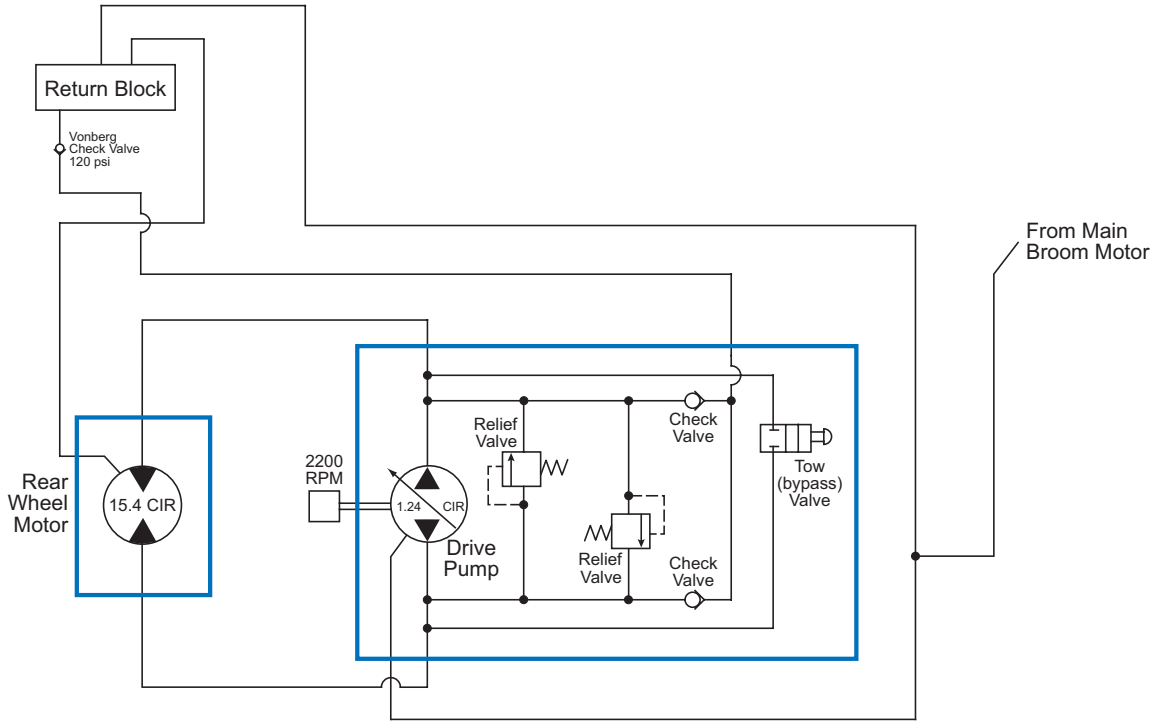

Tow Valve in Bypass Position

When the engine is off, the **Rear Wheel Motor** acts like a hydraulic pump and makes it difficult to rotate the rear wheel. The machine is equipped with a **Tow Valve** to eliminate this problem when towing or pushing the machine.

When the **Tow Valve** is rotated to the bypass (open) position, the oil is free to flow to and from the **Rear Wheel Motor** through the **Tow Valve** when the rear wheel is rotated, bypassing the **Drive Pump**. (Refer to the ***General Information/Towing or Pushing the Machine*** subsection in this manual.)

Note that while only one drive wheel direction is shown in the drawing below, the **Tow Valve** functions the same when the drive wheel is moved in either forward or reverse.

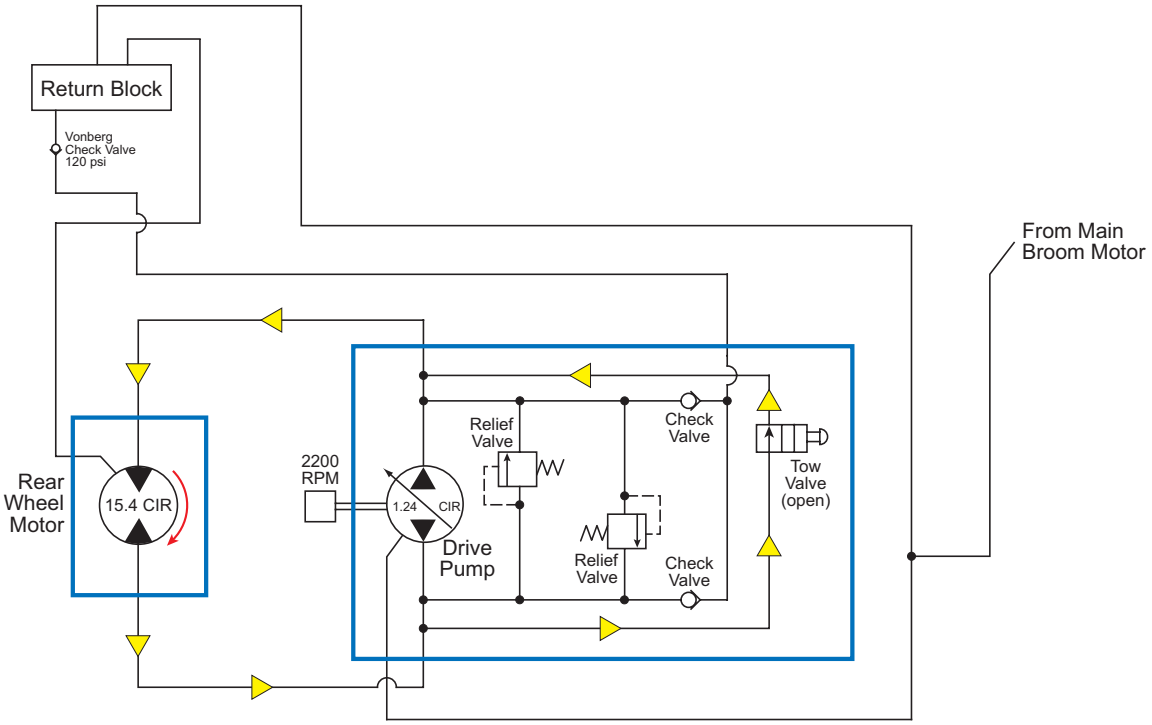

Rear Wheel Motor in Forward or Reverse

When the engine is running and the foot pedal is moved to either the forward or reverse position, the **Drive Pump** sends oil to the **Rear Wheel Motor** to drive the machine in the corresponding direction. The swash plate in the **Drive Pump** regulates the direction and volume of oil the **Drive Pump** sends to the **Rear Wheel Motor** to control the machine direction and speed.

The direction in which the foot pedal moves the swash plate in the **Drive Pump** controls the machine direction. The distance to which the foot pedal moves the swash plate in the **Drive Pump** controls the machine speed.

The **Check Valves** control the oil flow to the **Drive Pump** charge circuits. The case drain from the **Rear Wheel Motor** goes to the **Return Block**.

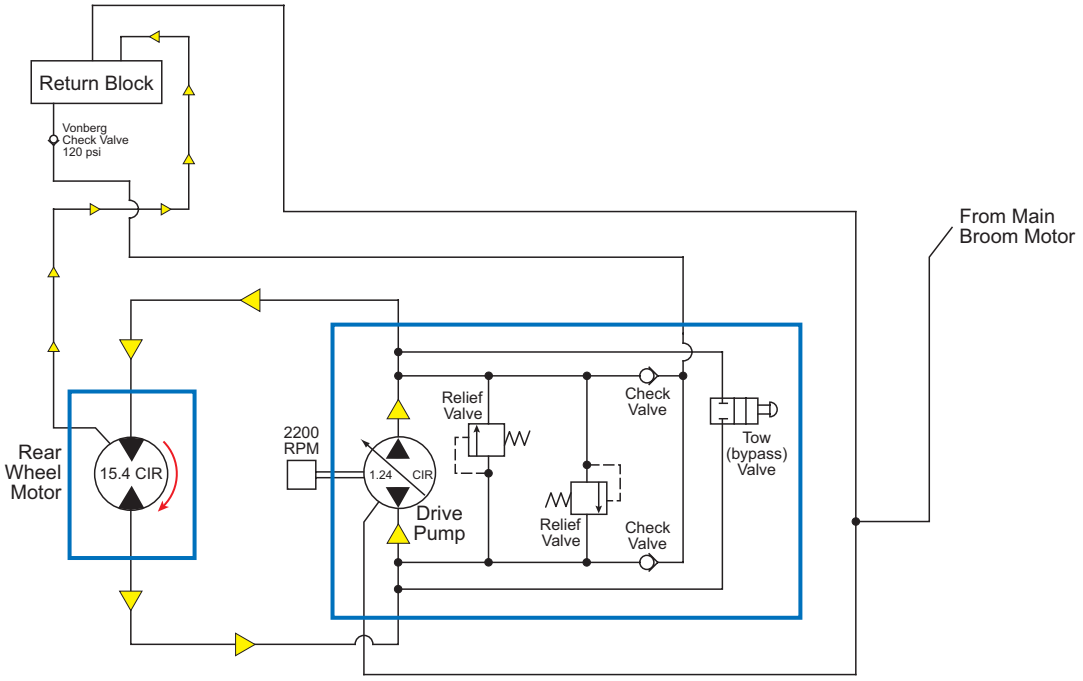

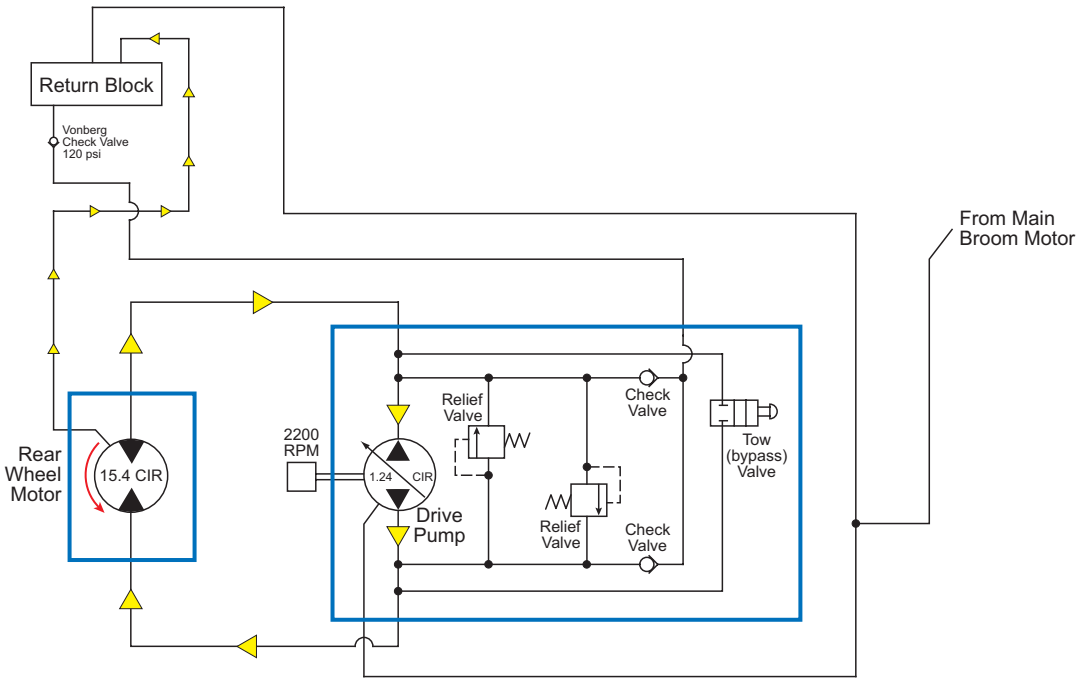

Rear Wheel Motor Stalling Out

If the **Rear Wheel Motor** is unable to run in forward or reverse for any reason (rear wheel stalled, etc.), the corresponding internal **Relief Valve** in the **Drive Pump** will open to bypass the **Rear Wheel Motor** to prevent damage to the hydraulic components.

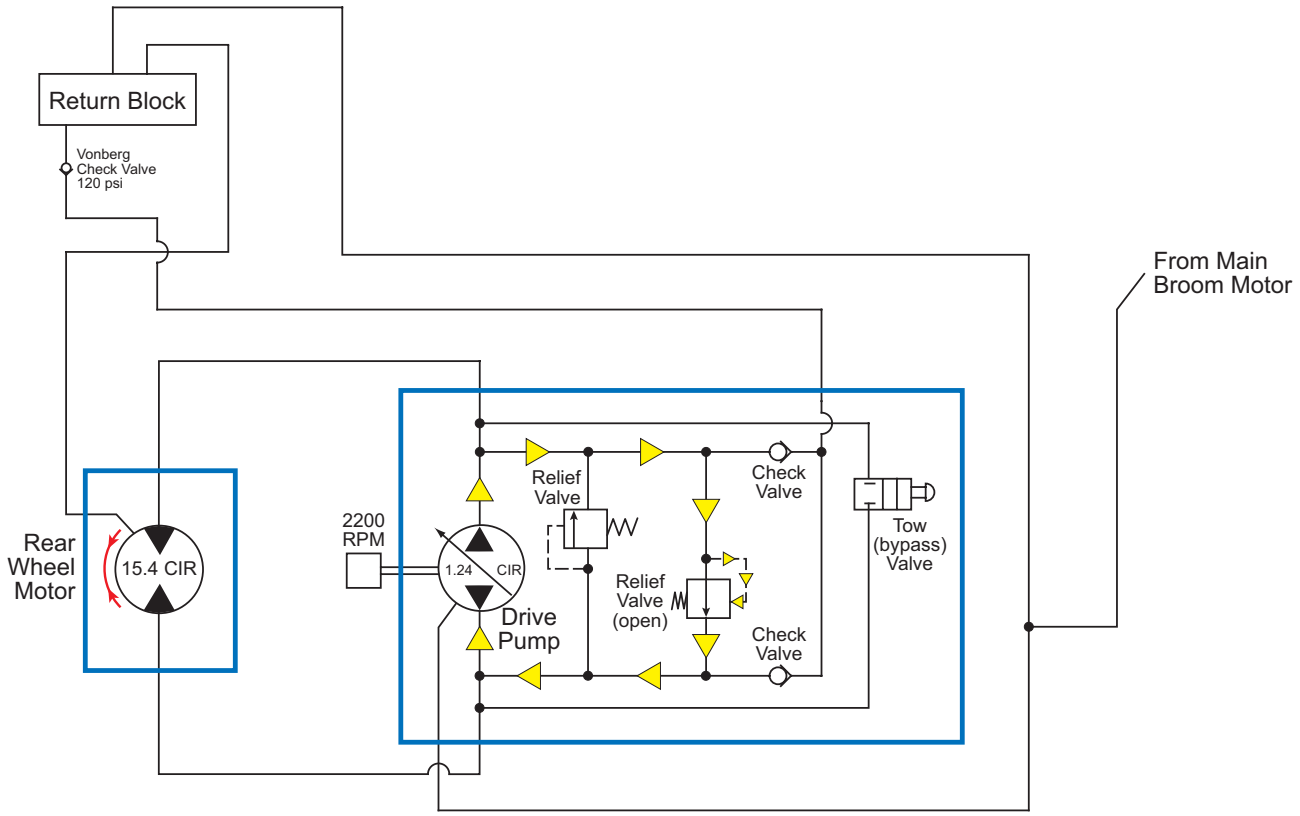

Maintenance and Adjustments

Warning! ***Before performing any machine maintenance or adjustments (other than the Hydroback adjustment), make sure the key switch is off, the key is removed from the machine and the parking brake is engaged.***

Lubrication

- Grease the **Fitting** above the steering rack every 100 hours of operation.
- Lubricate the drive wheel, swivel wheel bearings and steering rack guide (engine side above rear wheel).

Hydroback Adjustment

1. Jack up the rear of the machine to get the drive wheel up off the ground.
2. Install safety blocks or stands to support the rear of the machine.
3. Start the engine and observe the wheel rotation with the engine idling. If the wheel is rotating either forward or reverse with the drive pedal in the neutral position, adjust the Hydroback as follows:
   a. Loosen the two **3/8”-16 Screws** holding the **Pintle Arm Adjuster**.
   b. Adjust the **3/8”-16 Adjusting Screw** until the wheel stops turning.
   c. Tighten the two **3/8”-16 Screws**.

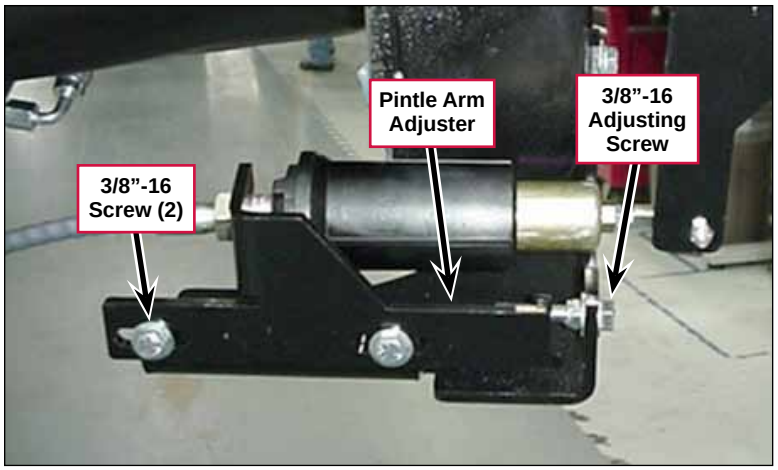

Hydroback Adjustment (Gasoline/LPG)

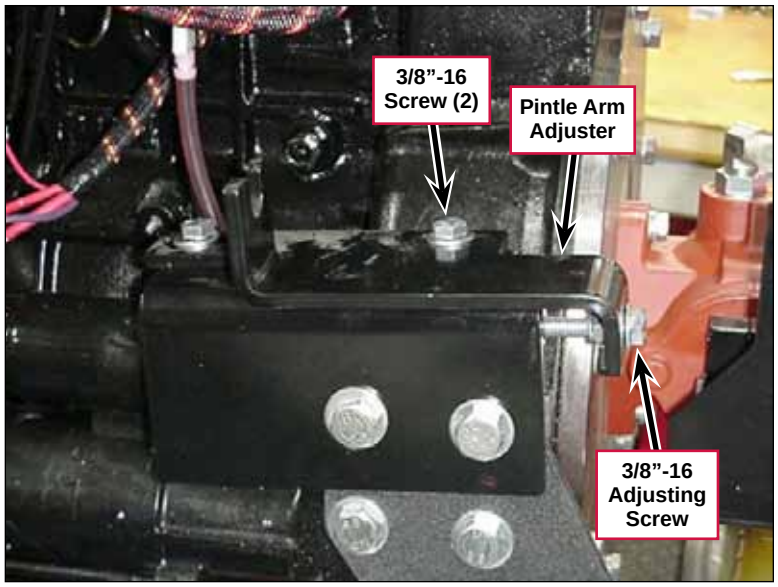

Hydroback Adjustment (Diesel)

Troubleshooting

Problem	Cause	Correction
The machine “creeps” forward or backward when the foot pedal is in the neutral position.	The forward/reverse controls are out of adjustment.	Adjust the forward/reverse controls and/or linkage so the machine is stationary when the foot pedal is in the neutral position.
	The cable or forward/ reverse controls are damaged or dirty.	Clean or replace the cable or forward/reverse controls as necessary.

Specifications

Component Specifications

Component	Specifications	
Tire (rear) drive/steer	Size 16 in x 6 in [406 mm x 152 mm]	
Rear Drive Wheel Motor	Displacement	Standard Motor – 15.4 CIR
		High-torque Motor – 19.8 CIR
	Shaft Rotation – Clockwise (as viewed from slot end)	
Drive Pump	Type – manually-variable displacement, axial piston pump, tow valve included	
	Displacement – 1.24 CIR	
	Speed – 3600 RPM max.	
	Continuous pressure – 3000 psi [206.8 bar] max.	
	Relief Setting, Main Ports – 3500 psi [241.3 bar]	

Wheel Drive System Torque Specifications

Description	Torque Specification
Steering Castle (Spindle) Nut	Torque to 40 ft.-lb. [54 Nm], then loosen to align cotter pin.
½”-20 Lug Nut	Torque to 100 ft.-lb. [135 Nm]
½”-13 Hex Nut	Torque to 100 ft.-lb. [135 Nm]
¾”-16 Slotted Hex Nut	270 ft.-lb. [366 Nm]