Whirlamatic™ UHSB 20

Whirlamatic™ UHSBD 20

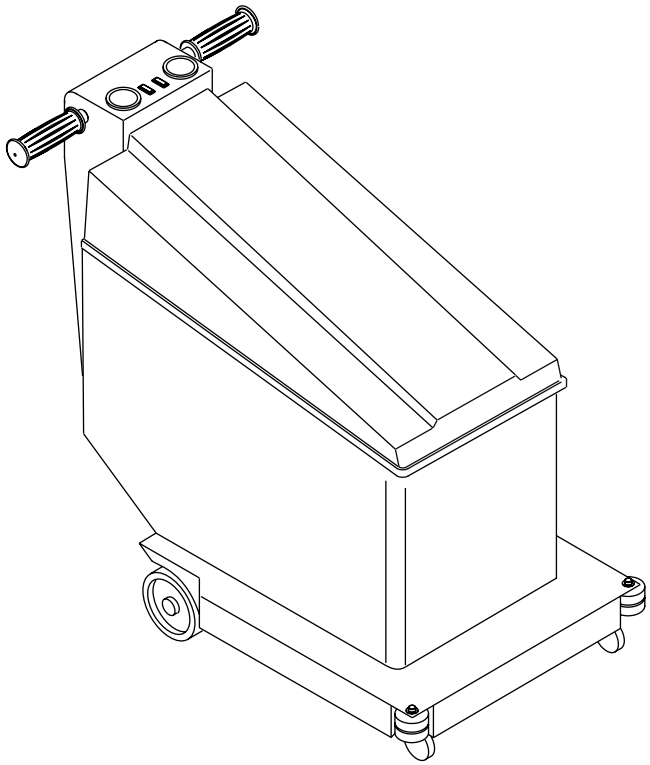

PARTS LIST

Advance MODELS 56393500 (UHSB 20), 56393930 (UHSB 20)
56393600 (UHSBD 20 / OBSOLETE)

Advance
by Nilfisk-Advance

1/91 revised 12/05 FORM NO. 56042243

DESCRIPTION	PAGE
CHASSIS AND SHROUD	2-3
HANDLE ASSEMBLY	4-5
PAD DRIVE ASSEMBLY	6-7
DRIVE MOTOR (UHSBD 20)	8-9
WIRING DIAGRAM (UHSB 20)	10-11
WIRING DIAGRAM (UHSB 20 / Low Voltage Lockout Kit)	12-13
WIRING DIAGRAM (UHSBD 20)	14-15

WHEN ORDERING PARTS

* Use the 8 digit numbers from the “Ref. No.” columns in this parts list.
* Specify the model and serial number of the machine.
* Use the space below to record the model and serial number for future reference.

Model _____ Serial No. _____

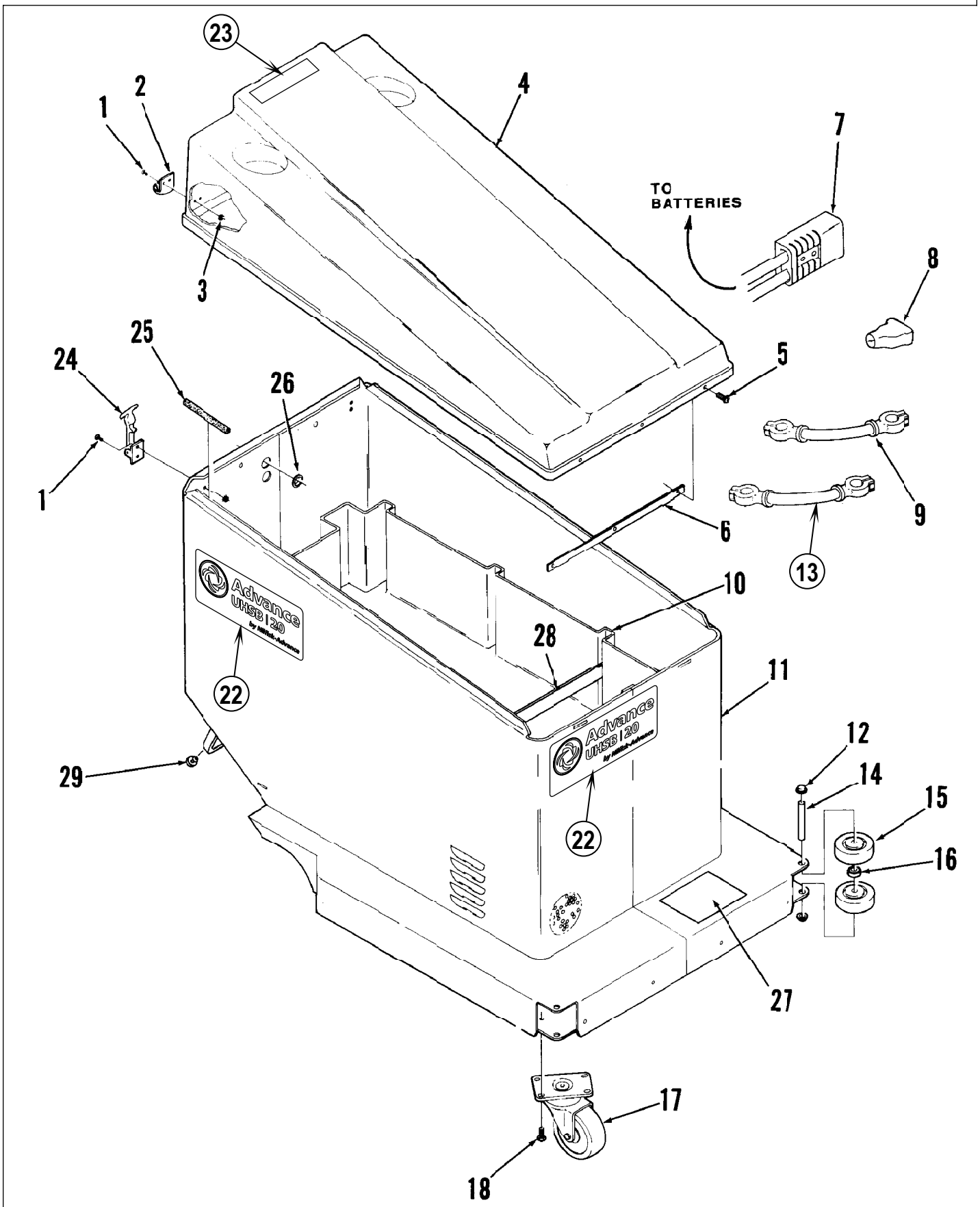
23
2
1
4
7
TO BATTERIES
8
3
25
24
26
5
1
9
6
13
10
Advance UHSB 20
28
22
11
Advance UHSB 20
12
29
14
15
22
16
27
17
18

Item	Ref. No.	Qty	Description
	56393561	1	Shroud Assembly **(#1-6)**
1		8	#6-32 x 3/8 Screw
2	56393559	2	Keeper
3		8	#6-32 Nut
4	56393503	1	Shroud
5		3	#10-24 x 3/8 Screw
6	56393539	1	Bracket
7	56391127	1	Connector with Wires **TSB 730**
8	56372673	12	Battery Boot
9	56363936	2	Cable **TSB 730**
10	56393574	1	Battery Tray
11	56393730	1	Chassis
12	56262534	4	Cap
13	56363928	3	Cable **TSB 730**
14	56393543	2	Pin
15	56363855	4	Wheel
16	56328022	2	Bushing
17	56206725	2	Caster
18		6	1/4-20 x 1/2 Screw
22	56016415	3	Decal, UHSB 20
23	56015171	1	Decal, Important
24	56393560	2	Latch
25	56393549	2	Trim
26	56157376	2	Grommet
27	56015120	1	Decal, Pad Replacement
28	56393578	1	Strap
29	56393581	2	Bumper

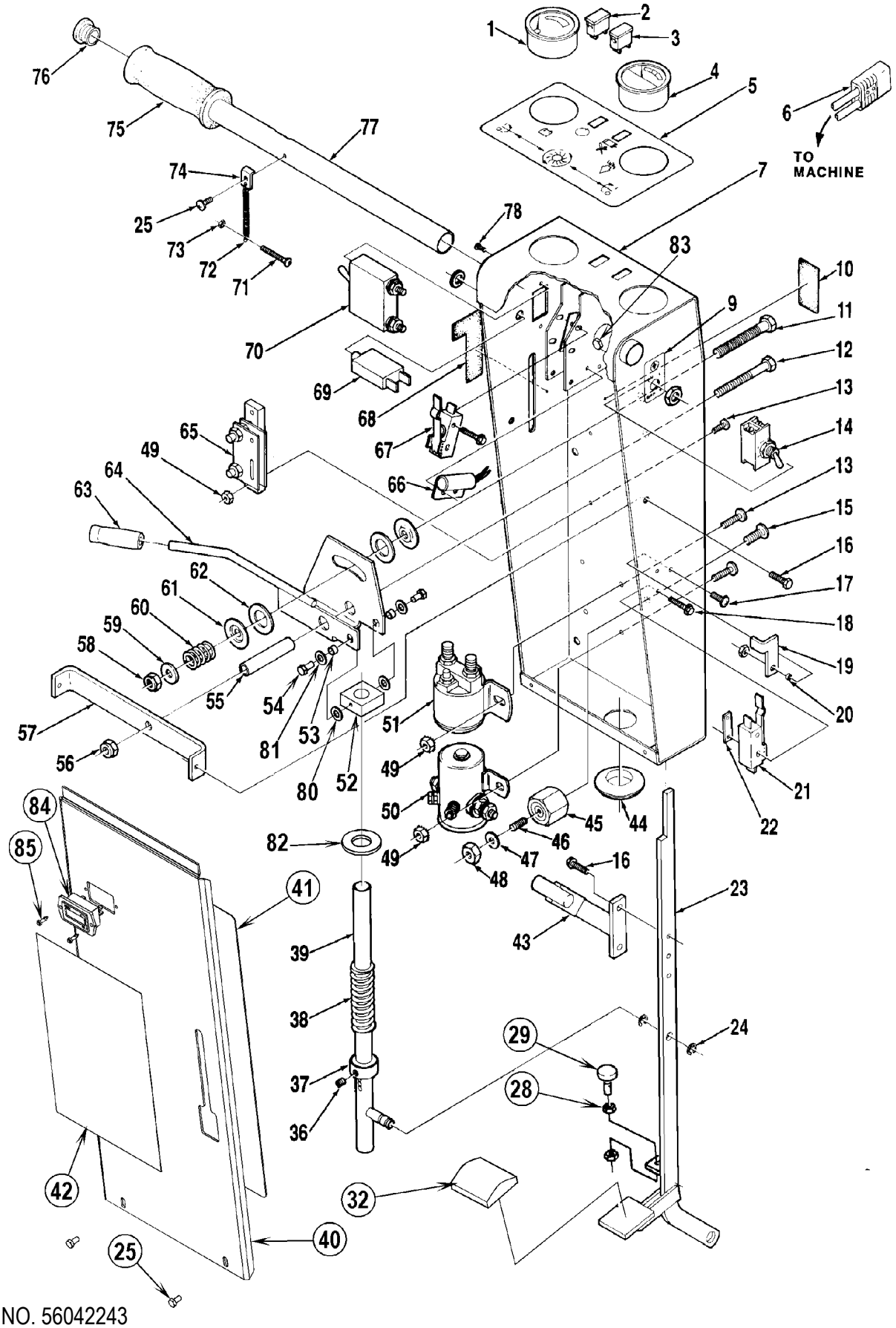

FORM NO. 56042243

HANDLE ASSEMBLY

Whirlamatic™ UHSB 20 / UHSBD 20

Item	Ref. No.	Qty	Description
	56393501	1	Handle Assembly **(56393500 only)**
	56393615	1	Handle Assembly **(56393600 only)**
1	56448677	1	Battery Meter
2	56389434	1	Green Indicator Light (before February 1998)
	56392858	1	Green Indicator Light (after January 1998)
3	56389433	1	Red Indicator Light (before February 1998)
	56393863	1	Red Indicator Light (after January 1998)
4	56389527	1	Amp Meter **TSB 672**
5	56015114	1	Decal, Control Handle
6	56393568	1	Connector with Wires
7	56393554	1	Handle **(before SN 531968)**
	56393653	1	Handle **(after SN 531697)**
9	56016112	1	Decal, Switch
10	56025264	1	Decal, Cable Routing
11		1	3/8-16 x 2 1/2 Bolt
12		1	5/16-18 x 3 1/2 Bolt
13		4	#10-24 x 1 Screw
14	56207071	1	Main Switch **TSB 575**
15		2	1/4-20 x 3/4 Screw
16		4	1/4-20 x 1/2 Screw
17		1	#10-24 x 3/4 Screw
18		4	#6-32 x 1 Screw
19	56393530	1	Lever
20	56375334	1	Bushing
21	56388019	1	Pad Up Switch
22	56376015	2	Nut Plate **(3 on 56393600)**
23	56388184	1	Pedal **TSB 609**
24	56321427	2	Retaining Ring
25	56009012	2	Scr, Hex Thd Form 10-24 x .38
28	56009087	2	Nut, Hex Jam1/4-20
29	56386314	1	Leveler
32	56365002	1	Pad
36		1	5/16-18 x 3/8 Set Screw
37	56367354	1	Collar
38	56372129	2	Spring
39	56393522	1	Rod
40	56393540	1	Panel
	56393723	1	Panel **(after SN 531697)**
41	56016068	1	Decal, Wiring (UHSB20)
	56015115	1	Decal, Wiring (UHSBD20)
42	56015119	1	Decal, Caution
43	56393533	1	Handle
44	56486116	1	Grommet
45	56469858	1	Insulated Stand-Off
46	56150274	1	Stud
47		1	1/4 Washer
48		1	1/4-20 Nut
49		4	#10-24 Nut **(6 on 56393600)**
50	56395452	1	Contactor 36V **(56393600 only)**
51	56395450	1	Contactor
52	56393696	1	Bearing Block Assembly
53	56200123	2	Bushing
54	56009039	2	#10-24 x 1/2 Hex Screw
55	56393520	1	Pivot
56		1	5/16-18 Nut
57	56393534	1	Support
58	56371424	1	Nut
59		1	3/8 Flat Washer
60	56171177	1	Spring
61	56440760	2	Washer
62	56367184	2	Thrust Bearing
63	56471193	1	Grip
64	56393528	1	Lever **TSB 672**
65	56386793	1	Shunt
66	56393569	1	Mercury Switch
67	56385615	1	Switch **(2 on 56393600)**
68	56015122	1	Decal, Circuit Breaker
69	56387316	1	Circuit Breaker
70	56391010	1	Circuit Breaker **TSB 607**
71		1	#10-24 x 1-1/4 Screw
72	56328790	1	Spring
73		1	#10-24 Nut
74	56393525	1	Retainer **(before SN 531698)**
75	56393579	2	Grip
76	56393580	2	Plug
77	56393529	1	Tube **(before SN 531698)**
	56393654	1	Tube **(after SN 531698)**
78		2	#6-32 x 3/8 Screw
79	56002591	1	#8-32 x 7/8 Screw **(after SN 531697)**
	56002518	1	#10-24 x 3/8 HP-5 Screw **(before SN 531968)**
80	56009024	2	Wsh, Bowed .375 x .84 x .06
81	56001954	2	Wsh, Flt SAE #10
82	56200115	1	Wsh, Flt
83	56234079	1	Screw
*	56001905	2	Wsh, Int Shprf 5/16
84	56393718	1	Hour Meter **(56393930 only)**
*	56389540	1	Wire, Ring / Female Receptacle **(56393930 only)**
*	56463277	2	Wire, Ring / Female Receptacle **(56393930 only)**
*	56325219	2	Tie, Cable **(56393930 only)**
85	56003712	2	Rivet, Micro-Tuflok .125 x .240 **(56393930 only)**
**	56393214	1	Low Voltage Lockout Kit **TSBUS2005-892**

* = Not Shown
** = Optional (Not Included)

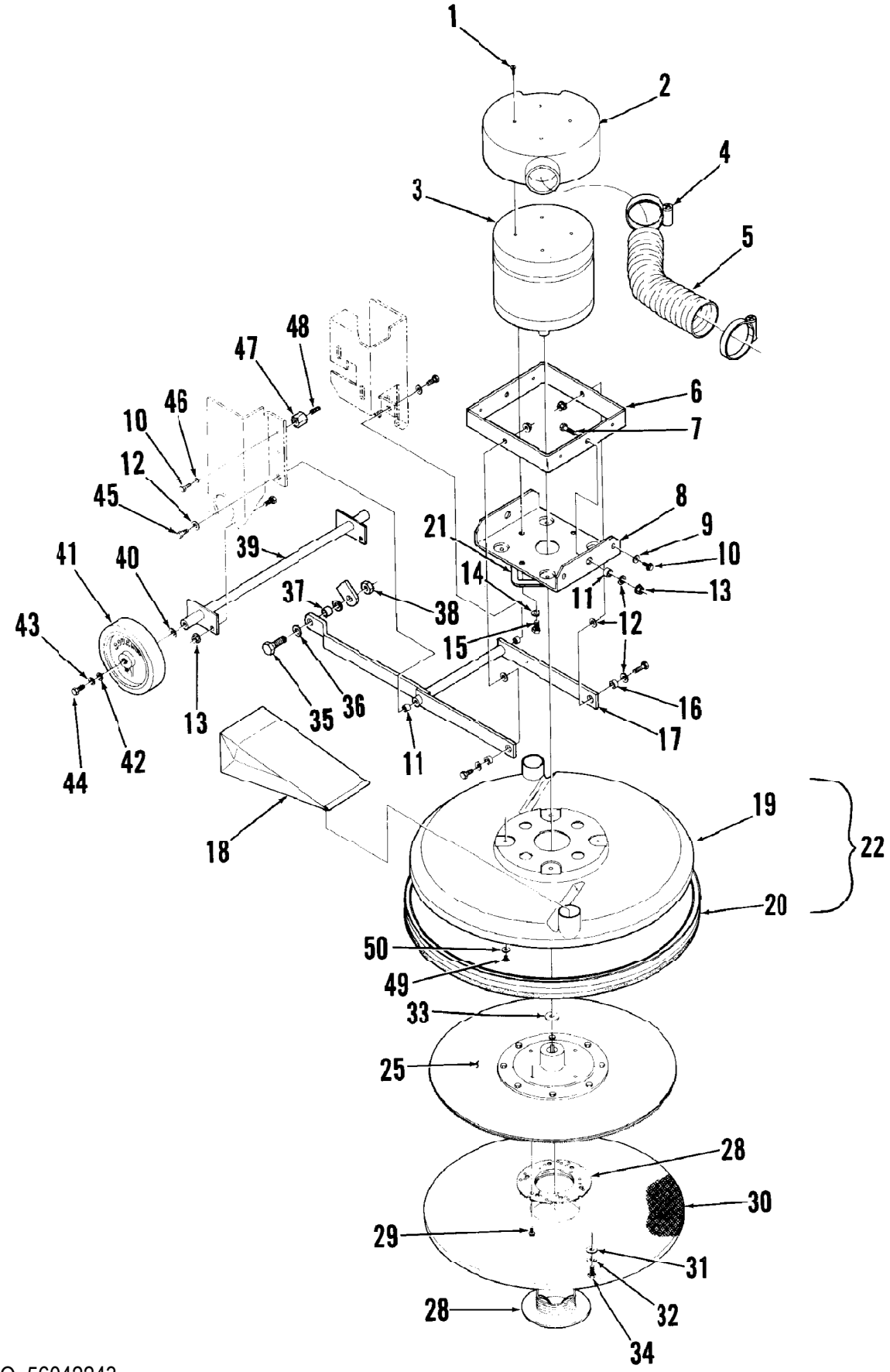
1
2
3
4
5
6
7
8
9
10
11
12
13
14
15
16
17
18
19
20
21
22
25
28
29
30
31
32
33
34
35
36
37
38
39
40
41
42
43
44
45
46
47
48
49
50

Item	Ref. No.	Qty	Description
	56393502	1	Drive Unit Assembly **(#1-17)**
1		4	1/4-20 x 3/8 Screw
2	56393576	1	Cover
3	56389422	1	Motor **TSB 672**
*	56389371	1	Carbon Brush Set
*	56389395	1	Brush Spring Set
4	56352829	4	Hose Clamp
5	56387392	2	Hose
6	56393542	1	Frame
7		4	5/16-18 x 1 Bolt
8	56393510	1	Motor Mount
9		2	1/4 Flat Washer
10		4	1/4-20 x 1/2 Screw
11	56391840	4	Bushing
12		8	5/16 Flat Washer
13		8	5/16-18 Whiz Nut
14		4	3/8 Shakeproof Washer
15		4	3/8-16 x 1/2 Bolt
16	56244941	2	Bushing
17	56393551	1	Linkage
18	56391185	2	Bag (package of 6)
*	56704408	2	Cloth Bag W/Clip **(56393930 only)**
19	56393504	1	Shroud
20	56393565	1	Skirt
21	56200754	2'	Gasket (61 cm)
22	56393566	1	Dust Shroud Assembly **(#19-21)**
25	56393650	1	Pad Holder **TSB 525**
28	56393567	1	Retainer
29		4	#10-24 x 3/8 Screw
30		1	Pad (not included)
31	56180200	1	Washer
32		1	5/16 Lock Washer
33	56367192	1	Washer
34		1	5/16-24 x 3/4 Bolt
35		1	1/2-13 x 1 1/4 Bolt
36	56367214	2	Washer
37	56365030	1	Bushing
38		1	1/2-13 Nut
39	56393548	1	Axle **(56393500 only)**
40	56362883	2	Washer **(56393500 only)**
41	56391110	2	Wheel **(56393500 only)**
42	56152781	2	Washer **(56393500 only)**
43		2	5/16 Shakeproof Washer **(56393500 only)**
44		2	5/16-18 x 5/8 Bolt **(56393500 only)**
45		2	5/16-18 x 3/4 Bolt
46		2	1/4 Shakeproof Washer
47	56469858	2	Insulated Stand-Off
48	56150274	2	Stud
49		4	1/4-20 x 1/4 Screw
50	56151114	4	Washer

* = Not Shown

Wheel Drive Conversion Kit (part no. 56393234) available for Model 56393500 **TSB 546**

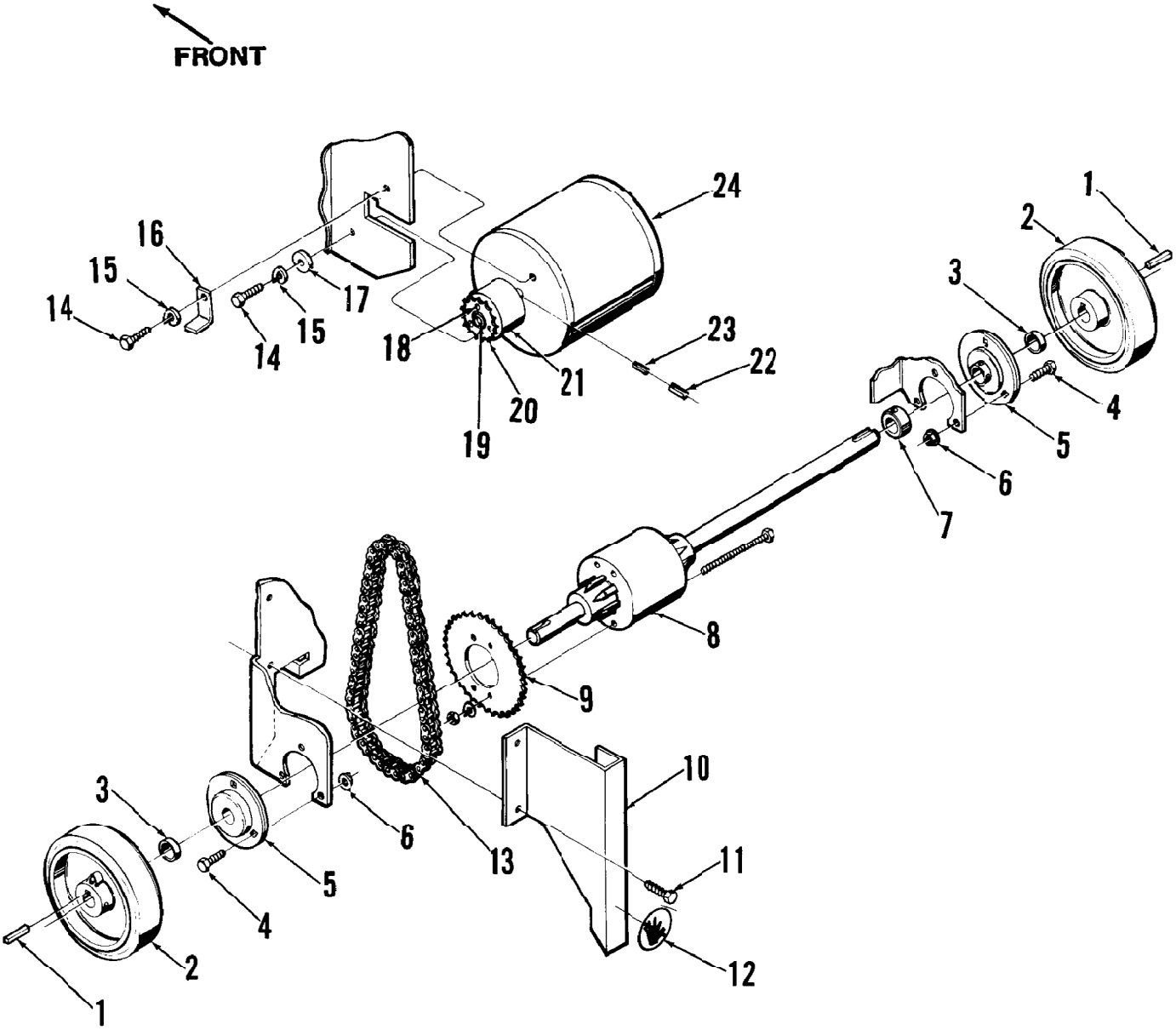
FRONT
1
2
3
4
5
6
7
8
9
10
11
12
13
14
15
16
17
18
19
20
21
22
23
24

Item	Ref. No.	Qty	Description
1	56443719	2	Key
2	56393602	2	Wheel
3	56393618	2	Spacer
4		6	5/16-18 x 3/4 Bolt
5	56393601	2	Bearing
6		6	5/16 Nut
7	56367095	1	Collar
8	56393603	1	Differential
9	56393609	1	Sprocket
10	56393616	1	Guard
11		2	1/4-20 x 1/2 Bolt
12	56030080	1	Decal, Hands Clear
13	56393606	1	Roller Chain
14		2	5/16-18 x 7/8 Bolt
15		2	5/16 Lock Washer
16	56393608	1	Tab
17	56152781	1	5/16 Washer
	56393613	1	Drive Motor Assembly **(#18-24)**
18		3	#10-32 x 3/8 Screw
19	56462265	1	Retaining Ring
20	56393604	1	Sprocket
21	56393614	1	Clutch
22	56002754	1	1/8 x 7/8 Spring Pin
23	56002756	1	1/16 x 7/8 Spring Pin
24	56393607	1	Drive Motor

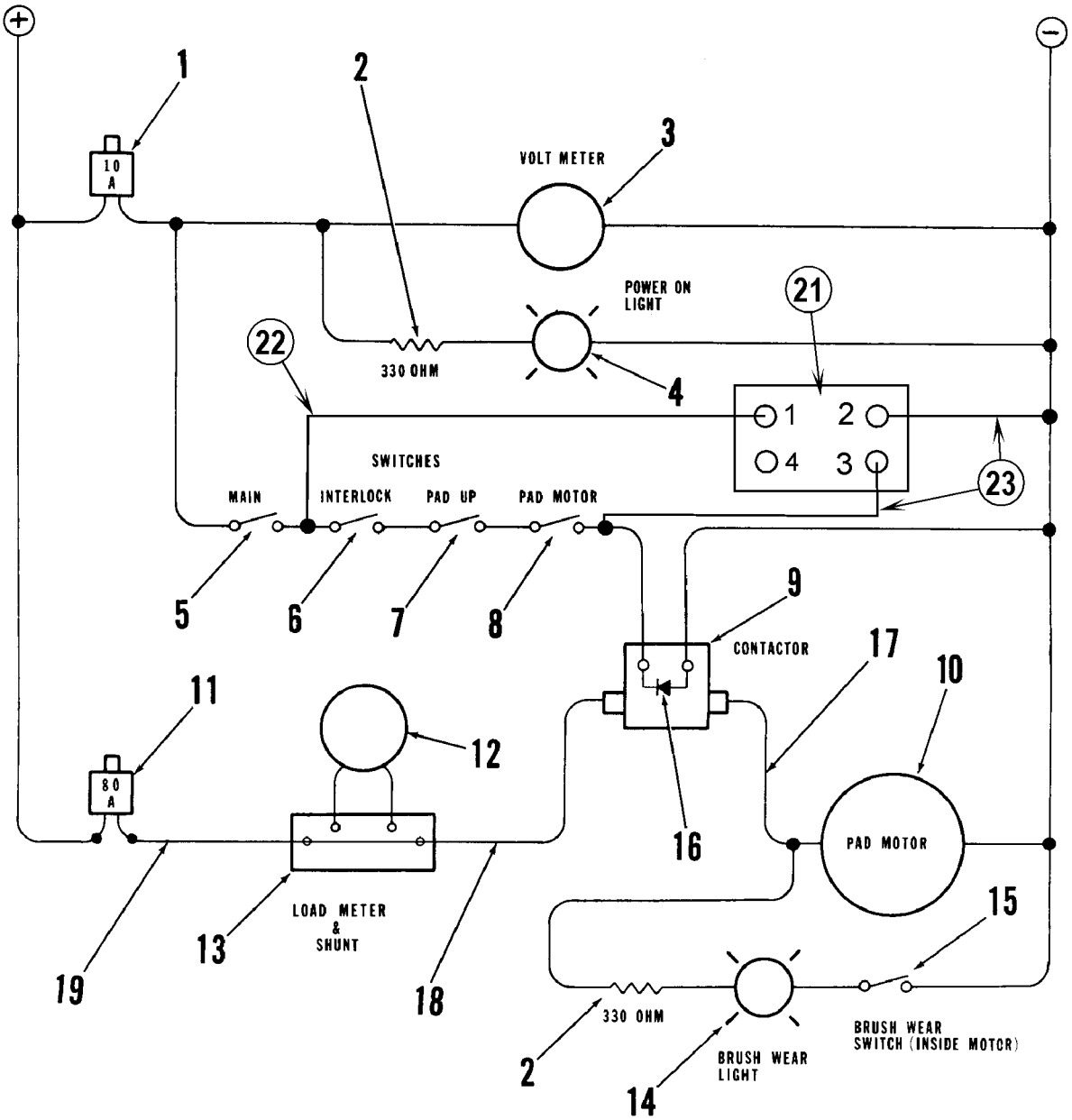
+
−
1
10 A
2
VOLT METER
3
POWER ON LIGHT
21
22
330 OHM
4
1 2
4 3
23
SWITCHES
MAIN
INTERLOCK
PAD UP
PAD MOTOR
5
6
7
8
9
CONTACTOR
17
10
11
80 A
12
16
PAD MOTOR
LOAD METER & SHUNT
13
19
18
15
330 OHM
BRUSH WEAR SWITCH (INSIDE MOTOR)
BRUSH WEAR LIGHT
2
14

Item	Ref. No.	Qty	Description
1	56387316	1	Circuit Breaker 10 Amp
2	56389453	2	Resistor 330 Ohm (before February 1998)
3	56448677	1	Battery Meter
4	56389434	1	Green Indicator Light (before February 1998)
	56392858	1	Green Indicator Light (after January 1998)
5	56207071	1	Main Switch **TSB575**
6	56393569	1	Mercury Switch
7	56388019	1	Pad Up Switch
8	56385615	1	Pad Motor Switch
9	56395450	1	Contactor
10	56389422	1	Pad Motor
11	56391010	1	Circuit Breaker **TSB607**
12	56389527	1	Load Meter
13	56386793	1	Shunt
14	56389433	1	Red Indicator Light (before February 1998)
	56393863	1	Red Indicator Light (after January 1998)
15		1	Brush Wear Switch
16	56389265	1	Rectifier
17	56377704	1	Cable
18	56393572	1	Cable
19	56393571	1	Cable
20	56393776	1	Wiring Harness (before February 1998)
	56393862	1	Wiring Harness (after January 1998)
21	56393718	1	Hour Meter **(56393930 only)**
22	56389540	1	Wire, Ring / Female Receptacle **(56393930 only)**
23	56463277	2	Wire, Ring / Female Receptacle **(56393930 only)**

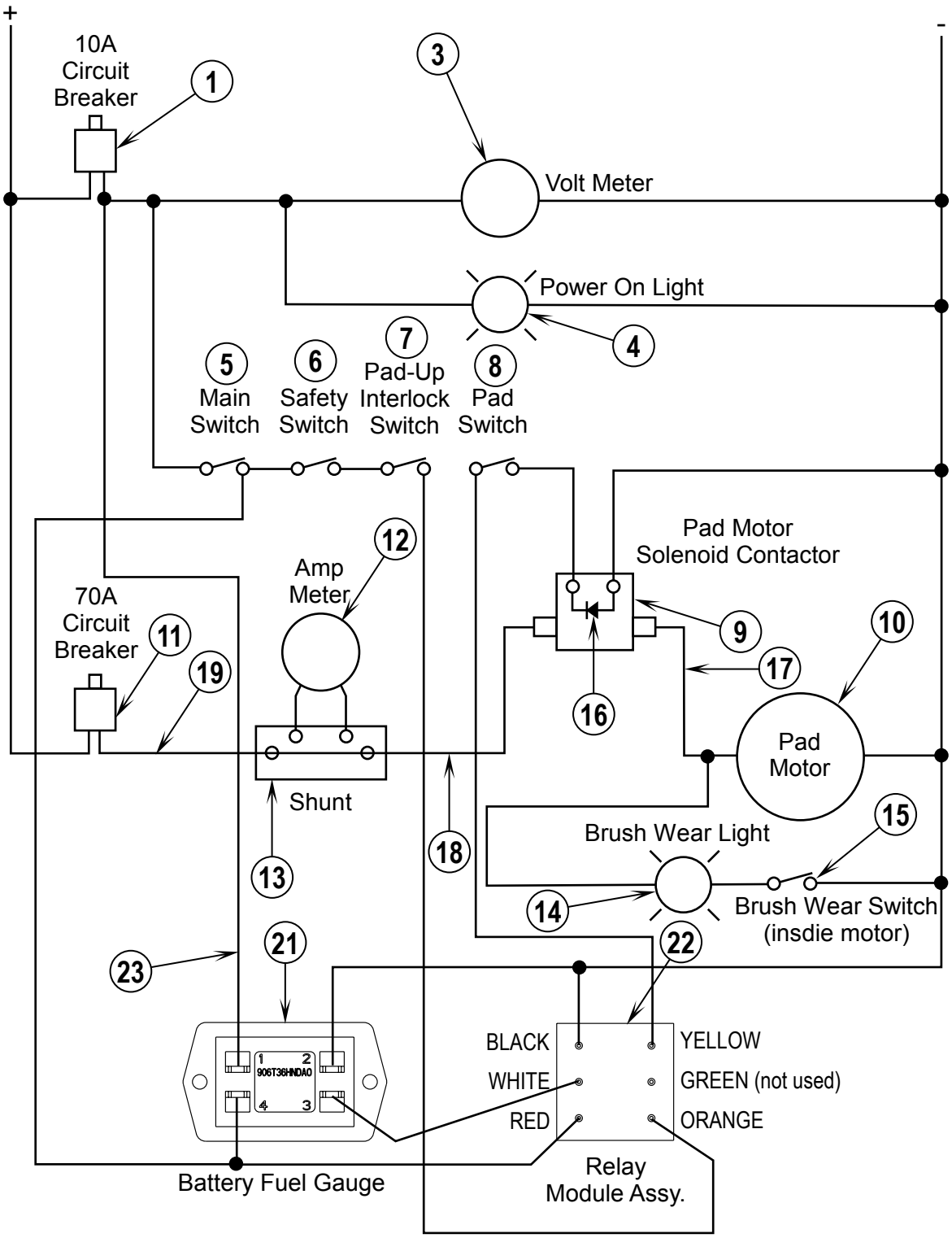
+
-
10A Circuit Breaker
1
3
Volt Meter
Power On Light
4
5 Main Switch
6 Safety Switch
7 Pad-Up Interlock Switch
8 Pad Switch
Pad Motor Solenoid Contactor
12
Amp Meter
70A Circuit Breaker
11
19
9
10
17
16
Pad Motor
Shunt
13
18
Brush Wear Light
15
14
Brush Wear Switch (insdie motor)
23
21
22
BLACK
WHITE
RED
YELLOW
GREEN (not used)
ORANGE
Battery Fuel Gauge
Relay Module Assy.

Item	Ref. No.	Qty	Description
1	56387316	1	Circuit Breaker 10 Amp
3	56448677	1	Battery Meter
4	56392858	1	Green Indicator
5	56301636	1	Main Switch
6	56393569	1	Mercury Switch
7	56388019	1	Pad Up Switch
8	56385615	1	Pad Motor Switch
9	56395450	1	Contactor
10	56389422	1	Pad Motor
11	56393722	1	Circuit Breaker 70 Amp
12	56389527	1	Load Meter
13	56386793	1	Shunt
14	56393863	1	Red Indicator Light
15	N/A	1	Brush Wear Switch
16	56389265	1	Rectifier
17	56377704	1	Cable
18	56393572	1	Cable
19	56393571	1	Cable
20	56393862	1	Wiring Harness (not shown)
21	56416395	1	Fuel Gauge, Battery **TSBUS2005-892**
22	56393216	1	Relay Module Assy **TSBUS2005-892**
23	56393221	1	Wire Asm., 18AWG **TSBUS2005-892**

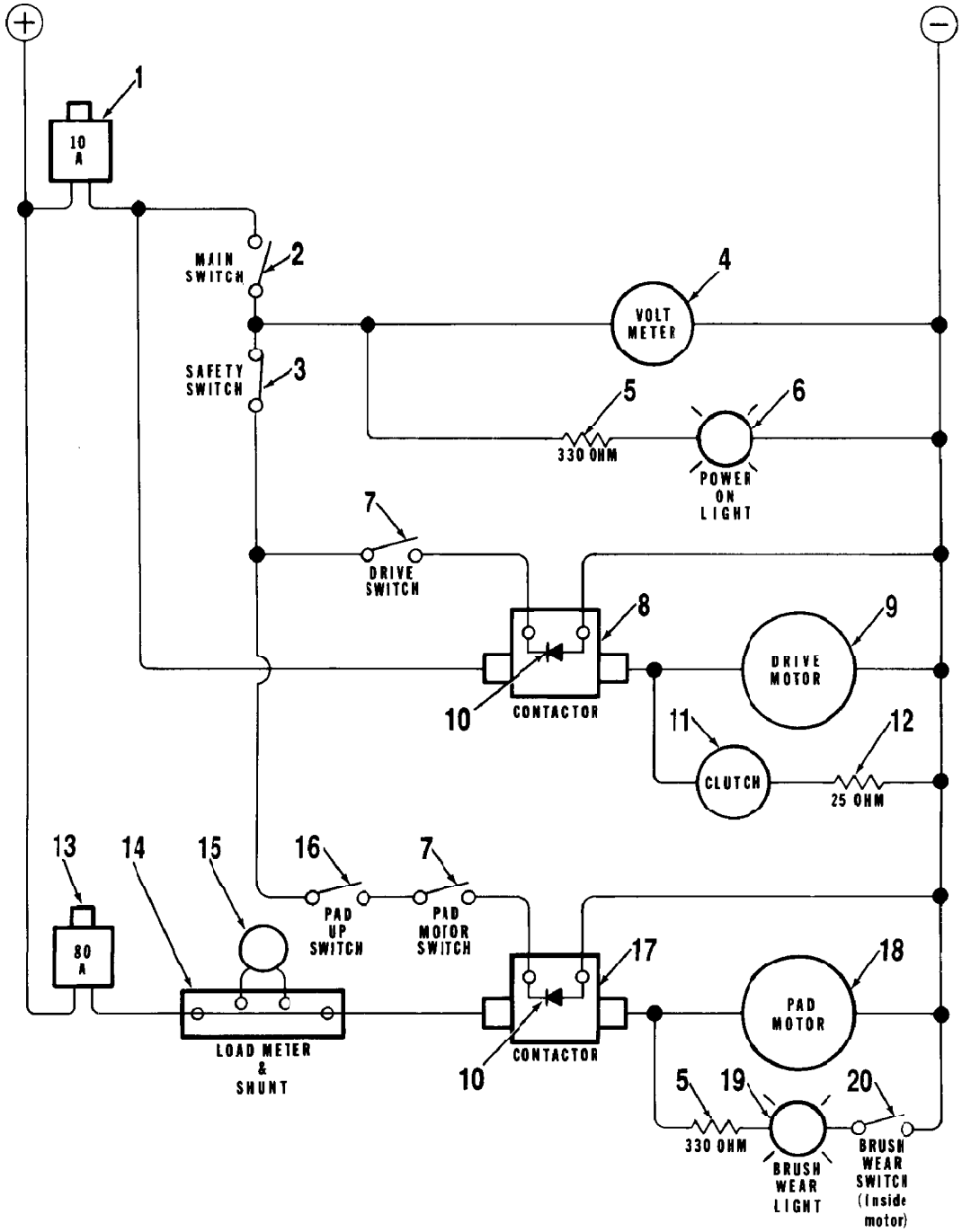
+
−
1
10 A
MAIN SWITCH
2
SAFETY SWITCH
3
4
VOLT METER
5
330 OHM
6
POWER ON LIGHT
7
DRIVE SWITCH
8
CONTACTOR
10
9
DRIVE MOTOR
11
CLUTCH
12
25 OHM
13
80 A
14
15
LOAD METER & SHUNT
16
PAD UP SWITCH
7
PAD MOTOR SWITCH
17
CONTACTOR
10
18
PAD MOTOR
5
330 OHM
19
BRUSH WEAR LIGHT
20
BRUSH WEAR SWITCH (Inside motor)

Item	Ref. No.	Qty	Description
1	56387316	1	Circuit Breaker 10 Amp
2	56207071	1	Main Switch
3	56393569	1	Mercury Switch
4	56448677	1	Battery Meter
5	56389453	2	Resistor 330 Ohm (before February 1998)
6	56389434	1	Green Indicator Light (before February 1998)
	56392858	1	Green Indicator Light (after January 1998)
7	56385615	2	Snap Switch
8	56395452	1	Contactor
9	56393613	1	Drive Motor
10	56389265	2	Rectifier
11	56393614	1	Clutch
12	56393612	1	25 Ohm Resistor
13	56391010	1	Circuit Breaker 80 Amp **TSB 607**
14	56386793	1	Shunt
15	56391132	1	Load Meter
16	56388019	1	Snap Switch
17	56395450	1	Contactor
18	56389422	1	Pad Motor
19	56389433	1	Red Indicator Light (before February 1998)
	56393863	1	Red Indicator Light (after January 1998)
20		1	Brush Wear Switch
*	56393776	1	Wiring Harness (before February 1998)
	56393862	1	Wiring Harness (after January 1998)

* = Not Shown

Nilfisk-Advance, Inc.
14600 21st Avenue North
Plymouth, MN 55447-3408
www.nilfisk-advance.com
Phone: 800-989-2235
Fax: 800-989-6566
©2005 Nilfisk-Advance, Inc.